PUMP STATION NO. 1 & 2 REHABILITATION

OCTOBER 2013

THE SUNSET CAPITAL OF FLORIDA

CITY OF ST. PETE BEACH, FLORIDA

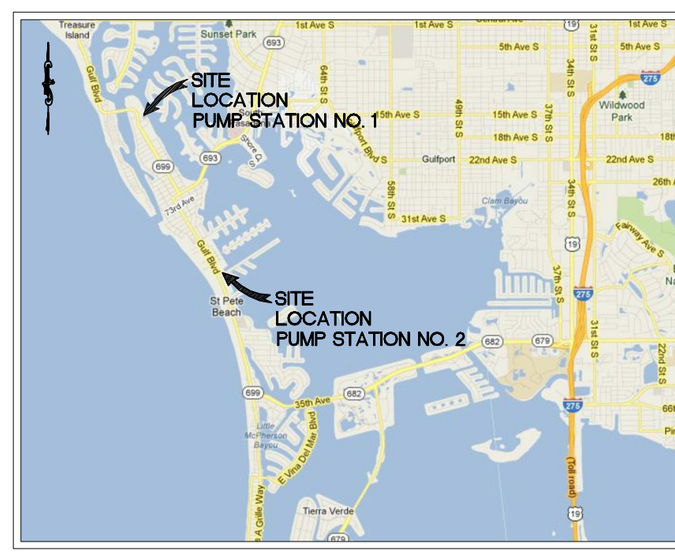

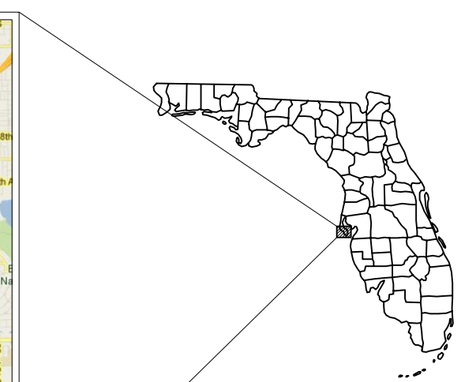

PROJECT VICINITY MAP

BID SET
NOT FOR CONSTRUCTION

PREPARED BY

Kimley-Horn and Associates, Inc.

© 2013 KIMLEY-HORN AND ASSOCIATES, INC.
655 NORTH FRANKLIN STREET, SUITE 150,
TAMPA, FL 33602
PHONE (813) 620-1460
WWW.KIMLEY-HORN.COM CA 00000696

WAYNE E. WHITE, P.E.
No. 53232

OCTOBER 2013 PUMP STATION NO. 1 & 2 REHABILITATION 148404000

BID SET

G01 - COVER SHEET

DISCIPLINE	DRAWING	TITLE
GENERAL	G-0.1	COVER SHEET
	G-0.2	DRAWING INDEX AND GENERAL NOTES
	G-0.3	MOT PLAN
	G-0.4	TEMP. ROADWAY PLAN
	G-0.5	BYPASS PUMPING PLAN
DEMOLITION	D-0.1	PUMP STATION 2 DEMOLITION PLAN
	D-0.2	PUMP STATION 1 DEMOLITION PLAN
CIVIL	C-0.1	PUMP STATION 2 SITE PLAN
	C-0.2	PUMP STATION 1 SITE PLAN
	C-0.3	YARD PIPING PLAN
	C-0.4	PAVING, GRADING, AND DRAINAGE PLAN
	C-0.5	GRADING SECTIONS
	C-0.6	CIVIL DETAILS
	C-0.7	CIVIL DETAILS
	C-0.8	CIVIL DETAILS
	C-0.9	CIVIL DETAILS
	C-1.0	CIVIL DETAILS
STRUCTURAL	S-0.1	PUMP STATION 2 WETWELL PLAN AND SECTIONS
	S-0.4	STRUCTURAL DETAILS
MECHANICAL	M-0.1	PUMP STATION 2 PLAN AND SECTION
	M-0.2	MECHANICAL DETAILS
	M-0.3	MECHANICAL DETAILS
	M-0.4	MECHANICAL DETAILS
ELECTRICAL	E-0.1	ELECTRICAL LEGEND
	E-0.2	ELECTRICAL SITE PLAN
	E-0.3	CONTROL BUILDING ELECTRICAL PLAN
	E-0.4	PUMP STATION 1 ELECTRICAL SITE PLAN
	E-3.1	MOTOR CONTROL CENTER & ONE-LINE DIAGRAM
	E-3.2	VFD WIRING DIAGRAM
	E-3.3	PUMP DISCONNECT AND FLOW METER ELEVATIONS
	E-3.4	ELECTRICAL DETAILS
	E-3.5	ELECTRICAL DETAILS AND SCHEDULES
	3-3.6	PUMP STATION 2 VFD SCHEMATICS AND DIAGRAMS
INSTRUMENTATION	I-0.1	INSTRUMENTATION LEGEND
	I-3.1	PLC CONTROL CABINET DETAILS
	I-3.2	PLC WIRING SCHEMATICS
	I-3.3	PLC WIRING SCHEMATICS

DETAIL CALL OUT SYMBOLS

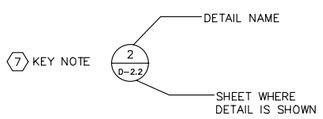

PICTURE SYMBOLS

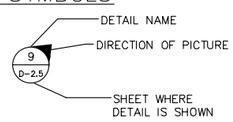

SECTION CUT SYMBOLS

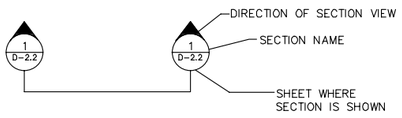

LEGEND

EXSITING (EX.) VENTS

DEMOLITION

EX. TREE

EX. WATER MAIN — W

EX. FORCE MAIN — FM

EX. WATER VALVES — W

EX. METER BOX — W

EX. RECLAIMED WATER — RCW

EX. BURIED TELEPHONE — BT

EX. BURIED ELECTRIC — BE

EX. OVERHEAD LINE — OHL

EX. BURIED GAS — G

EX. GRAVITY SEWER — S

EX. ASPHALT PAVEMENT

EX. CONCRETE SURFACE

PROPOSED CONCRETE SURFACE

EX. SANITARY MANHOLE — S

EX. SIGN

EX. ELECTRIC BOX — E

REMOVE AND REPLACE PAVEMENT

PROPOSED FLANGED PIPE FITTING

PROPOSED MECHANICAL JOINT FITTING

EASEMENT LINE

RIGHT-OF-WAY LINE

PROPOSED GAS LINE — G

PROPOSED GAS METER — G

WETWELL NOTES

1. ALL WETWELL AND EXPOSED PIPING IS TO BE FLANGED. ALL BURIED PIPE AND FITTING SHALL BE MECHANICAL JOINT.
2. ALL WETWELL PIPING IS TO RECEIVE TWO COATS OF KOPPERS BITUMASTIC 300M, 8-10 MILS D.F.T./COAT OR EQUIVALENT. FIRST COAT RED, SECOND COAT BLACK.
3. SEE SITE PLAN FOR CORRECT ORIENTATION OF PIPES, VENTS, AND OTHER FIXTURES.
4. THE CONTRACTOR SHALL COORDINATE PLACEMENT OF ACCESS COVERS WITH THE PUMP MANUFACTURER TO ENSURE THAT PROPER CLEARANCES ARE ATTAINED.

INSTALLATION NOTES

1. TEST BY WIRING ALL WIRES AND MOTORS. READINGS SHALL BE 20 MEGA-OHMS OR MORE TO GROUND. (DO NO MEGGER LOW VOLTAGE CONTROLS)
2. OPERATE PUMPS, CHECK DIRECTION, RECORD VOLTAGE AND AMPERAGE WITH EACH AND BOTH RUNNING. ALL WORK TO BE COMPLETED WITH THE SUPPLIER'S FIELD REPRESENTATIVE PRESENT.
3. ALL CABLES GOING TO WETWELLS SHALL BE CONTINUOUS WITH NO SPLICES.
4. CABLES FOR PUMP MOTORS SHALL BE SUFFICIENT LENGTH TO ALLOW PUMP MOTORS TO BE REMOVED FOR SERVICING.

STRUCTURAL NOTES

1. GENERAL:
(A) PROTECT EXISTING FACILITIES, STRUCTURES AND UTILITY LINES FROM ALL DAMAGE. CONTRACTOR SHALL PROTECT THE WORK, ADJACENT PROPERTY, AND THE PUBLIC. CONTRACTOR IS SOLELY RESPONSIBLE FOR DAMAGE OR INJURY DUE TO HIS ACT OR NEGLECT.

(B) THE CONTRACTOR IS SOLELY RESPONSIBLE FOR JOB SAFETY AND CONSTRUCTION PROCEDURES.

(C) PRIOR TO CONSTRUCTION, FIELD VERIFY ALL DIMENSIONS IN THE DRAWINGS AND DETAILS, AND REPORT ANY DISCREPANCIES IMMEDIATELY TO THE ENGINEER.

(D) REFER TO THE ENGINEER FOR INSTRUCTION FOR ANY DIMENSION NOT GIVEN ON DRAWINGS. SCALING OF DRAWINGS SHALL NOT BE USED TO OBTAIN OR VERIFY ANY DIMENSION SHOWN ON THE DRAWINGS.

2. CONCRETE:

(A) ALL CONCRETE MATERIALS, PLACING AND HANDLING SHALL BE IN ACCORDANCE WITH THE LATEST EDITION OF ACI 318 AND ACI 301.

(B) ALL STRUCTURAL CONCRETE SHALL HAVE A MINIMUM 28-DAY COMPRESSIVE STRENGTH OF 4000 PSI (UNLESS OTHERWISE NOTED).

(C) PROVIDE 3" CONCRETE COVER OVER REINFORCING BARS EXCEPT AS OTHERWISE NOTED.

(D) FORM TIES AND REINFORCING BAR SUPPORTS SHALL BE OF NON-CORROSIVE MATERIAL INCLUDING, BUT NOT LIMITED TO, FIBERGLASS, PLASTIC, AND/OR CONCRETE BLOCK.

(E) CONCRETE FINISHES: FORMED SURFACE-SMOOTH FORM FINISH PER ACI 301.

(F) ALL GROUT SHALL BE NON-SHRINK, NON-METALLIC.

(G) CONCRETE SHALL BE CURED IMMEDIATELY AFTER FINISHING OPERATIONS IN ACCORDANCE WITH ONE OF THE FOLLOWING METHODS:
1. APPLY A LIQUID MEMBRANE CHEMICAL CURING COMPOUND IN ACCORDANCE WITH ASTM C-309.
2. WET CURE IN ACCORDANCE WITH ACI 301.

(H) ALL CONCRETE CONSTRUCTION SHALL BE DONE IN THE DRY.

(I) PROVIDE 3/4" CHAMFER ON ALL EXPOSED EDGES UNLESS OTHERWISE NOTED. OMIT AT WALLS WITH PRECAST CAPS.

(J) CONCRETE SHALL BE IN ACCORDANCE WITH ASTM C94:
1. TYPE II PORTLAND CEMENT – ASTM C150
2. AGGREGATES (3/4" MAX.) – ASTM C33
3. USE OF CALCIUM CHLORIDE IS NOT PERMITTED
4. AIR ENTRAINING (4% MAX.) – ASTM C260
5. WATER REDUCING – ASTM C494
6. FLY ASH (MAX 20% BY WEIGHT), TYPE F – ASTM C618
7. WATER – CLEAN AND POTABLE
8. MAXIMUM WATER CEMENT RATIO FOR 4,000 PSI, 28-DAY COMPRESSIVE STRENGTH = 0.45

(A) REQUIRED SLUMP: 2" TO 4"

(B) CONTRACTOR IS RESPONSIBLE FOR THE PROPER DESIGN AND CONSTRUCTION OF ALL FORMWORK AND SHORING. DESIGN SHALL BE PERFORMED BY A LICENSED FLORIDA PROFESSIONAL ENGINEER.

(M) A QUALIFIED TESTING LABORATORY SHALL BE RETAINED TO PERFORM THE FOLLOWING CONCRETE TESTS:
1. CYLINDER STRENGTH TESTS – ASTM C39. ONE SET OF FIVE CYLINDERS FOR EACH 50 CUBIC YARDS OR FRACTION THEREOF PLACED. TEST ONE AT 3 DAYS, ONE AT 7 DAYS, TWO AT 28 DAYS, AND HOLD ONE.
2. SLUMP TESTS – ASTM C143

(N) ONE COPY OF ALL TEST REPORTS SHALL BE SENT DIRECTLY TO OWNER, ENGINEER, AND CONTRACTOR.

(P) CONCRETE SHALL BE PLACED WITHIN 90 MINUTES OF BATCH TIME.

(Q) ALL CONCRETE SHALL BE CONSOLIDATED IN PLACE USING INTERNAL VIBRATORS.

(R) SUBMITTALS:
1. SUBMIT PROPOSED CONCRETE MIX DESIGN PRIOR TO CONSTRUCTION
2. SUBMIT DETAILED SHOP DRAWINGS OF REINFORCING BARS SHOWING NUMBER, SIZE, AND LOCATION. INCLUDE BAR LISTS AND BEND DIAGRAMS.

3. REINFORCEMENT:
(A) REINFORCING STEEL SHALL BE A.S.T.M. A-615 WITH SUPPLEMENT, GRADE 60: MINIMUM WORKING STRESS – 24,000 PSI.

(B) ALL REINFORCEMENT SHALL BE UNCOATED (BLACK).

(D) ALL DIMENSIONS PERTAINING TO LOCATION OF REINFORCING BARS ARE TO CENTERLINE OF BARS EXCEPT WHERE THE CLEAR DIMENSION IS SHOWN TO FACE OF CONCRETE.

(D) REINFORCEMENT DETAIL DIMENSION ARE OUT-TO-OUT OF BARS.

(E) ACI STANDARD HOOKS SHALL BE USED UNLESS OTHERWISE NOTED.

(F) ALL LAP AND SPLICE LENGTHS SHALL BE IN ACCORDANCE WITH THE LATEST EDITION OF ACI 318 AND CRSI STANDARD PRACTICES, EXCEPT AS OTHERWISE NOTED.
4. FOUNDATIONS:
(A) NOTIFY THE ENGINEER IMMEDIATELY OF ANY EXISTING FOUNDATION CONDITIONS OR DETAILS THAT ARE IN CONFLICT WITH THOSE INDICATED AND SHOWN IN THE DRAWINGS.

(B) ADHERE TO THE RECOMMENDATIONS MADE IN THE FOUNDATION RECOMMENDATIONS SECTION OF THE GEOTECHNICAL REPORT BY MC SQUARED, INC. AND DATES AUGUST 1, 2013 (PROJECT #T061317.148)

(C) ALL FILL SHOULD CONSIST OF CLEAN SAND WITH LESS THAN 12% PASSING THE NO. 200 SIEVE AND BE FREE OF RUBBLE, ORGANICS, CLAY, DEBRIS, AND OTHER UNSUITABLE MATERIAL. FILL SHALL BE PLACED IN LIFTS NOT EXCEEDING 8 INCHES IN THICKNESS AND SHOULD BE COMPACTED TO A MINIMUM OF 98% OF THE MODIFIED PROCTOR MAXIMUM DRY DENSITY. THE MOISTURE CONTENT OF FILL SOILS AT THE TIME OF PLACEMENT AND COMPACTION SHOULD BE WITHIN 2 PERCENTAGE POINTS OF THEIR OPTIMUM MOISTURE CONTENT.

GENERAL NOTES

1. LOCATIONS, ELEVATIONS, AND DIMENSIONS OF EXISTING UTILITIES, STRUCTURES, AND OTHER FEATURES ARE SHOWN ACCORDING TO THE BEST INFORMATION AVAILABLE AT THE TIME OF PREPARATION OF THESE PLANS, BUT DO NOT PURPORT TO BE ABSOLUTELY CORRECT OR COMPLETE. PRIOR TO CONSTRUCTION, THE CONTRACTOR SHALL VERIFY AND AGREE TO BE FULLY RESPONSIBLE FOR ANY AND ALL DAMAGES WHICH MIGHT BE OCCASIONED BY HIS FAILURE TO EXACTLY LOCATE AND PRESERVE ANY AND ALL EXISTING UTILITIES, STRUCTURES, AND OTHER FEATURES AFFECTING HIS WORK. ANYTHING NOT SHOWN ON THESE DRAWINGS SHOULD BE BROUGHT TO THE ATTENTION OF THE ENGINEER AND SHALL NOT CONSTITUTE AN EXTRA EXPENSE, UNLESS APPROVED BY THE OWNER. THE CONTRACTOR SHALL NOTIFY THE RESPECTIVE UTILITY COMPANIES NO LATER THAN 48 HOURS PRIOR TO COMMENCING WORK IN A SPECIFIC AREA. THE CONTRACTOR SHALL BE RESPONSIBLE FOR THE VERIFICATION OF ALL UTILITIES LOCATIONS WITHIN THE WORK AREA.
2. THE CONTRACTOR SHALL CONTACT THE ENGINEER OF RECORD IMMEDIATELY CONCERNING ANY CONFLICTS ARISING DURING CONSTRUCTION OF ANY IMPROVEMENTS SHOWN ON THESE DRAWINGS.
3. SHOP DRAWINGS SHALL BE FURNISHED TO THE ENGINEER FOR REVIEW OF ALL PIPE CONNECTIONS. TRANSITIONS AND SPECIALS PRIOR TO FABRICATION OR DELIVERY TO THE JOB SITE.
4. ALL ROADWAYS, CURBS, SIDEWALKS, LAWNS, LANDSCAPING, MAILBOXES, SIGNS, ETC. DISTURBED DURING THE WORK SHALL BE RESTORED TO A CONDITION EQUAL TO THAT EXISTING PRIOR TO CONSTRUCTION AND/OR AS SHOWN ON THE DRAWINGS AND SPECIFICATIONS. CURB, DRIVEWAY, SIDEWALK REPLACEMENT AND ASPHALT SHALL BE IN ACCORDANCE WITH FDOT STANDARD DRAWINGS AND SPECIFICATIONS.
5. ALL JOINTS WHERE REQUIRED SHALL BE RESTRAINED IN ACCORDANCE WITH THE SPECIFICATIONS AND AS SHOWN ON THE DRAWINGS. CONCRETE REACTION BLOCKS WILL NOT BE APPROVED IN LIEU OF RESTRAINED JOINTS UNLESS DIRECTION BY THE ENGINEER AND OWNER.
6. THE CONTRACTOR SHALL CONFINE WORK WITHIN THE LIMITS OF EXISTING RIGHTS-OF-WAYS AND LIMITS OF CONSTRUCTION AS SHOWN ON THE DRAWINGS.
7. CONTRACTOR SHALL PROVIDE MAINTENANCE OF TRAFFIC IN ACCORDANCE WITH THE SPECIFICATIONS.
8. CONTRACTOR SHALL CONTACT MR. DAVID BENEVIDES, PUBLIC SERVICES DEPARTMENT (727) 423-0577 TO COORDINATE THE SHUTDOWN OF THE EXISTING LIFT STATION.
9. THE CONTRACTOR SHALL NOTIFY THE RESPECTIVE PROPERTY OWNERS A MINIMUM OF 24 HOURS IN ADVANCE OF ANY AND ALL WORK REQUIRING DISRUPTION IN SERVICE TO ANY BUSINESS OR RESIDENCE SHALL NOT EXCEED 2 HOURS FOR WATER AND 4 HOURS FOR SANITARY SEWER SERVICE. ACCESS TO PROPERTY SHALL BE MAINTAINED AT ALL TIMES.
10. PROPERTY MARKERS SHALL BE PROTECTED BY THE CONTRACTOR, THE CONTRACTOR'S REGISTERED SURVEYOR SHALL REPLACE ANY MARKERS THAT ARE DISTURBED.
11. THE CONTRACTOR SHALL PROVIDE AND IMPLEMENT SITE SPECIFIC EROSION AND SEDIMENT CONTROL PROCEDURES SUCH AS HAY BALES OR SILT SCREENS, OR OTHER APPROVED METHODS AS REQUIRED, TO PREVENT THE TRANSPORT OF SEDIMENT DOWNSTREAM INTO STREETS, STORM SEWERS, DITCHES, PONDS, ETC.
12. ALL EXISTING TRAFFIC SIGNS WITHIN THE PROPOSED CONSTRUCTION LIMITS ARE TO BE PROTECTED BY THE CONTRACTOR. CAUTION SHOULD BE EXERCISED WHILE RELOCATING EXISTING SIGNS WHERE DIRECTED IF THE SIGNS ARE DAMAGED BEYOND USE, AS DETERMINED BY THE ENGINEER. SIGNS SHALL BE REPLACED BY THE CONTRACTOR AT HIS EXPENSE.
13. THE CONTRACTOR SHALL ADJUST (AS REQUIRED) PIPELINE ALIGNMENTS HORIZONTALLY AND/OR VERTICALLY TO AVOID CONFLICTS WITH ACTUAL FIELD CONDITIONS AS UNCOVERED DURING CONSTRUCTION. FIELD ADJUSTMENT SHALL BE COORDINATED WITH, AND APPROVED BY, THE ENGINEER.
14. THE CONTRACTOR SHALL PROVIDE ALL DEWATERING EQUIPMENT NECESSARY TO KEEP EXCAVATIONS DRY AND SHALL BE PROVIDE ALL SHORING, SHEETING, AND BRACING NECESSARY TO PROTECT WORKMEN, ADJACENT STRUCTURES, UTILITIES, EXISTING PAVEMENT, OR TO MINIMIZE TRENCH WIDTH AT NO ADDITIONAL COST.
15. EXISTING PUMPS AND PUMP RAILS ARE TO BE SALVAGED AND DELIVERED BY CONTRACTOR TO CITY OF ST. PETE BEACH PUBLIC SERVICE YARD.

UTILITY NOTES

1. THE CONTRACTOR SHALL BE RESPONSIBLE FOR COORDINATING WITH THE FOLLOWING JURISDICTIONAL BODIES AND UTILITY COMPANIES:

CALL 2 BUSINESS DAYS BEFORE YOU DIG
IT'S THE LAW!
DIAL 811
811 Know what's below. Call before you dig.
SUNSHINE STATE ONE CALL OF FLORIDA, INC.

DUKE ENERGY
JOHN KRUSZONA
6565 38TH AVE N
ST.PETERSBURG, FL 33710
(727) 593-6934

PINELLAS COUNTY UTILITIES
JAY PERKINS
14 S. FORT HARRISON AVE 6TH FLOOR
CLEARWATER, FL 33756
727-464-3536

VERIZON FLORIDA INC.
ROBIN ARNOLD
1909 US HWY 301 N
FLG2-750
TAMPA, FL 33619
813-627-8343

CITY OF ST. PETE BEACH
RENEE COOPER
155 COREY AVE
ST. PETE BEACH, FL 33706
(727) 363-9254

PINELLAS COUNTY HWY.
AND ENG.
22211 US 19 N.
CLEARWATER, FL 33765
(727) 464-8900

BRIGHTHOUSE NETWORKS
TED BINGHAM
700 CARILLON PARKWAY
SUITE 6
ST. PETERSBURG, FL 33716
727-329-2847

TECO PEOPLES GAS
JASMIN GRIMARD
1920 9TH AVE N
ST. PETERSBURG, FL 33713
(727) 423-7140

2. ALL BELOW GROUND DUCTILE IRON PIPE SHALL BE ENCASED IN A POLYETHYLENE WRAP IN ACCORDANCE WITH AWWA STANDARDS.
3. ALL VALVE BOX COVERS SHALL BE PAINTED TO INDICATE THEIR TYPE OF SERVICE.
4. ALL TEST POINT TAPPING SHALL BE CUT LOOSE FROM THE CORPORATION STOP AND COMPLETELY REMOVED AND DISPOSED OF BY THE CONTRACTOR PRIOR TO FINAL ACCEPTANCE. THE CORPORATION STOP SHALL BE CAPPED AND REMAIN IN PLACE,
5. ADJUST EXISTING MANHOLE FRAMES AND COVERS TO MATCH FINAL GRADE.

GROUNDWATER / DEWATERING NOTE:

THE PRESENCE OF GROUNDWATER SHOULD BE ANTICIPATED ON THIS PROJECT. CONTRACTOR'S BID SHALL INCLUDE CONSIDERATION FOR THIS ISSUE. WHEN PERFORMING GRADING OPERATIONS DURING PERIODS OF WET WEATHER, PROVIDE ADEQUATE DEWATERING, DRAINAGE AND GROUND WATER MANAGEMENT TO CONTROL MOISTURE OF SOILS.

811 KNOW WHAT'S BELOW ALWAYS CALL 811 BEFORE YOU DIG
It's fast. It's free. It's the law.
www.callsunshine.com

No.	REVISIONS	DATE	BY

Kimley-Horn and Associates, Inc.
© 2013 KIMLEY-HORN AND ASSOCIATES, INC.
655 NORTH FRANKLIN STREET, SUITE 150, TAMPA, FL 33602
PHONE: 813-620-1460
WWW.KIMLEY-HORN.COM CA 00000696

DESIGN ENGINEER: WAYNE E. WHITE, P.E.
FLORIDA REGISTRATION NUMBER: 53232
DATE:

SCALE AS NOTED
DESIGNED BY JWW
DRAWN BY JRT
CHECKED BY WEW

DRAWING INDEX AND GENERAL NOTES

CITY OF ST. PETE BEACH
PUMP STATION NO.1 & 2
REHABILITATION
PINELLAS COUNTY FLORIDA

DATE
OCTOBER 2013

PROJECT NO.
148404000

SHEET NUMBER
G-0.2

Drawing name: K:\TAM_Civil\148404 – City of St. Pete Beach\000 – Pump Station No. 2\CADD\PlanSheets\G-02 DRAWING INDEX AND GENERAL NOTES Oct 25, 2013 11:19am by: jordan.walker
This document, together with the concepts and designs presented herein, as an instrument of service, is intended only for the specific purpose and client for which it was prepared. Reuse of and improper reliance on this document without written authorization and adaptation by Kimley-Horn and Associates, Inc. shall be without liability to Kimley-Horn and Associates, Inc.

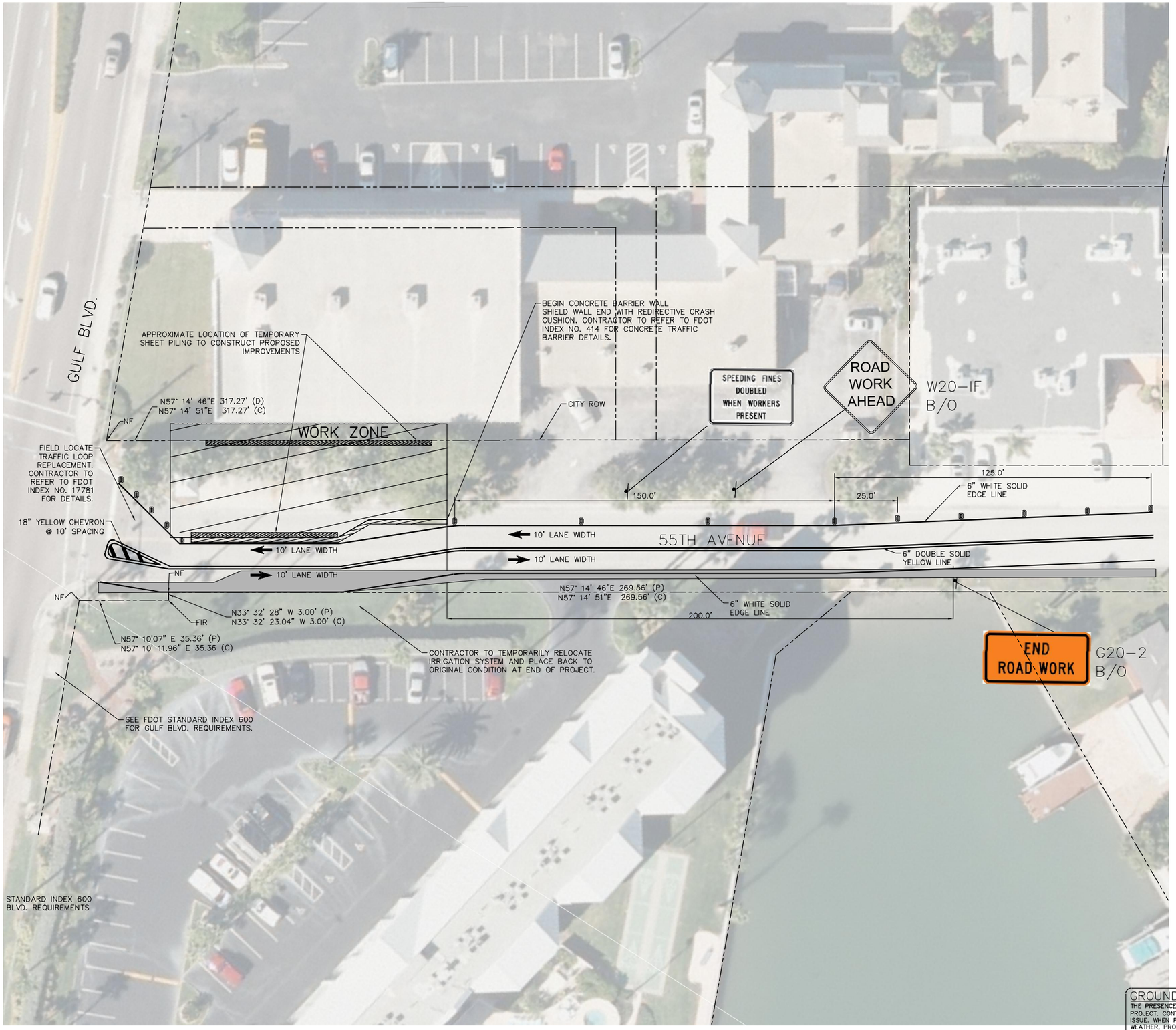

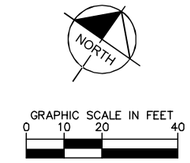

GENERAL NOTES:

1. CONTRACTOR SHALL FIELD VERIFY EXISTING CONDITIONS PRIOR TO BEGINNING CONSTRUCTION AND ORDERING EQUIPMENT. CONTRACTOR SHALL NOTIFY ENGINEER OF DISCREPANCIES.
2. 6" WATER MAIN TO BE CONSTRUCTED FIRST TO MEET MOT PLANS AND LANE WIDTH REQUIREMENTS
3. CONTRACTOR SHALL TAKE ALL PRECAUTIONARY MEASURES NECESSARY TO PROTECT EXISTING EQUIPMENT, UTILITIES, STRUCTURES, AND PERSONNEL FROM DAMAGE OR INJURY DURING CONSTRUCTION.
4. CONSTRUCTION SEQUENCE SHALL BE COORDINATED TO AVOID ANY PUMP STATION INTERRUPTION.
5. BY-PASS PUMPING WILL BE REQUIRED FROM TWO SEPARATE MANHOLES. COORDINATE ALL BY-PASS OPERATIONS WITH THE CITY OF ST. PETE BEACH.
6. CONTRACTOR TO REFER TO FDOT INDEX NO.S 613 AND 616 FOR DETAILS AND NOTES REGARDING MAINTENANCE OF TRAFFIC PLAN.

GROUNDWATER / DEWATERING NOTE:
THE PRESENCE OF GROUNDWATER SHOULD BE ANTICIPATED ON THIS PROJECT. CONTRACTOR'S BID SHALL INCLUDE CONSIDERATION FOR THIS ISSUE. WHEN PERFORMING GRADING OPERATIONS DURING PERIODS OF WET WEATHER, PROVIDE ADEQUATE DEWATERING, DRAINAGE AND GROUND WATER MANAGEMENT TO CONTROL MOISTURE OF SOILS.

811 KNOW WHAT'S BELOW ALWAYS CALL 811 BEFORE YOU DIG
It's fast. It's free. It's the law.
www.callsunshine.com

No.	REVISIONS	DATE	BY

Kimley-Horn and Associates, Inc.
© 2013 KIMLEY-HORN AND ASSOCIATES, INC.
655 NORTH FRANKLIN STREET, SUITE 150, TAMPA, FL 33602
PHONE: 813-620-1460
WWW.KIMLEY-HORN.COM CA 00000696

DESIGN ENGINEER: WAYNE E. WHITE, P.E.
FLORIDA REGISTRATION NUMBER: 53232

SCALE: AS NOTED
DESIGNED BY: JWW
DRAWN BY: JRT
CHECKED BY: WEW
DATE:

MOT PLAN

CITY OF ST. PETE BEACH
PUMP STATION NO.1 & 2
REHABILITATION
PINELLAS COUNTY FLORIDA

DATE
OCTOBER 2013

PROJECT NO.
148404000

SHEET NUMBER
G-0.3

Drawing name: K:\TAM_Civil\148404 - City of St. Pete Beach\000 - Pump Station No. 2\CADD\PlanSheets\G-03 MOT PLAN.dwg MOT PLAN Oct 25, 2013 9:59am by: jordan.walker
This document, together with the concepts and designs presented herein, as an instrument of service, is intended only for the specific purpose and client for which it was prepared. Reuse of and improper reliance on this document without written authorization and adaptation by Kimley-Horn and Associates, Inc. shall be without liability to Kimley-Horn and Associates, Inc.

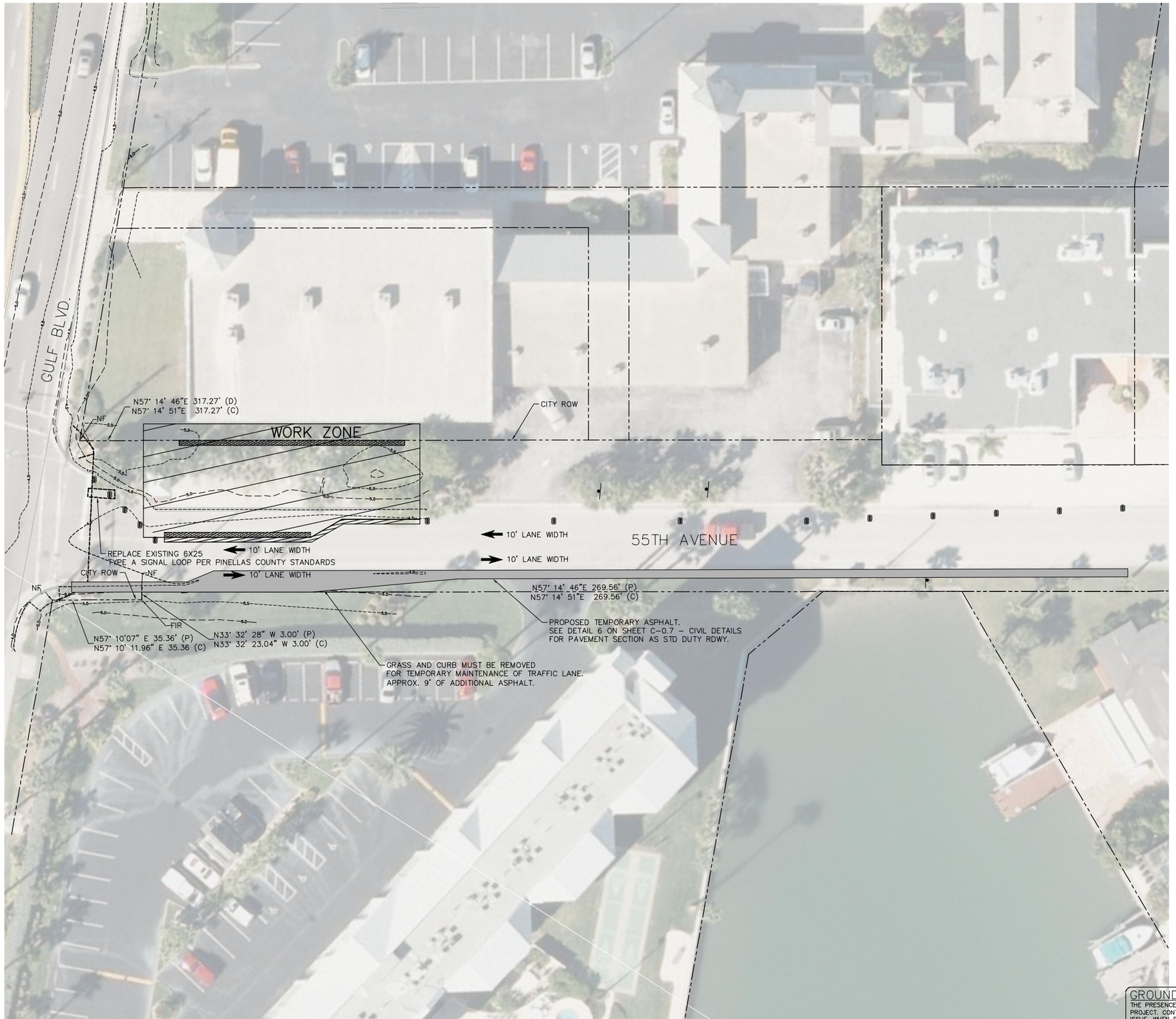

NORTH

GRAPHIC SCALE IN FEET
0 10 20 40

GENERAL NOTES:

1. CONTRACTOR SHALL FIELD VERIFY EXISTING CONDITIONS PRIOR TO BEGINNING CONSTRUCTION AND ORDERING EQUIPMENT. CONTRACTOR SHALL NOTIFY ENGINEER OF DISCREPANCIES.
2. CONTRACTOR SHALL TAKE ALL PRECAUTIONARY MEASURES NECESSARY TO PROTECT EXISTING EQUIPMENT, UTILITIES, STRUCTURES, AND PERSONNEL FROM DAMAGE OR INJURY DURING CONSTRUCTION.
3. CONSTRUCTION SEQUENCE SHALL BE COORDINATED TO AVOID ANY PUMP STATION INTERRUPTION.
4. CONTRACTOR TO REFER TO FDOT INDEX NO.S 613 AND 616 FOR DETAILS AND NOTES REGARDING MAINTENANCE OF TRAFFIC PLAN.
5. MAINTAIN EXISTING DRAINAGE PATTERNS WHEN ADDING TEMPORARY PAVEMENT
6. ONCE PROJECT CONSTRUCTION IS COMPLETED TEMPORARY PAVEMENT MUST BE REMOVED. ADDITIONALLY, ROADWAY CURB, SODDING, AND STRIPING MUST BE INSTALLED TO CONFORM TO PREVIOUSLY EXISTING ROADWAY CONDITIONS.

GROUNDWATER / DEWATERING NOTE:
THE PRESENCE OF GROUNDWATER SHOULD BE ANTICIPATED ON THIS PROJECT. CONTRACTOR'S BID SHALL INCLUDE CONSIDERATION FOR THIS ISSUE. WHEN PERFORMING GRADING OPERATIONS DURING PERIODS OF WET WEATHER, PROVIDE ADEQUATE DEWATERING, DRAINAGE AND GROUND WATER MANAGEMENT TO CONTROL MOISTURE OF SOILS.

811 KNOW WHAT'S BELOW ALWAYS CALL 811 BEFORE YOU DIG
It's fast. It's free. It's the law.
www.callsunshine.com

No.	REVISIONS	DATE	BY

Kimley-Horn and Associates, Inc.
© 2013 KIMLEY-HORN AND ASSOCIATES, INC.
655 NORTH FRANKLIN STREET, SUITE 150, TAMPA, FL 33602
PHONE: 813-620-1460
WWW.KIMLEY-HORN.COM CA 00000696

DESIGN ENGINEER: WAYNE E. WHITE, P.E.
FLORIDA REGISTRATION NUMBER: 53232

SCALE AS NOTED
DESIGNED BY JWW
DRAWN BY JRT
CHECKED BY WEW
DATE:

TEMP. ROADWAY PLAN

CITY OF ST. PETE BEACH
PUMP STATION NO.1 & 2
REHABILITATION
PINELLAS COUNTY FLORIDA

DATE
OCTOBER 2013

PROJECT NO.
148404000

SHEET NUMBER
G-0.4

Drawing name: K:\TAM_Civil\148404 - City of St. Pete Beach\000 - Pump Station No. 2\CADD\PlanSheets\G-04 TEMP. ROADWAY PLAN.dwg TEMP. ROADWAY PLAN Oct 25, 2013 10:46am by: jordan.walker
This document, together with the concepts and designs presented herein, as an instrument of service, is intended only for the specific purpose and client for which it was prepared. Reuse of and improper reliance on this document without written authorization and adaptation by Kimley-Horn and Associates, Inc. shall be without liability to Kimley-Horn and Associates, Inc.

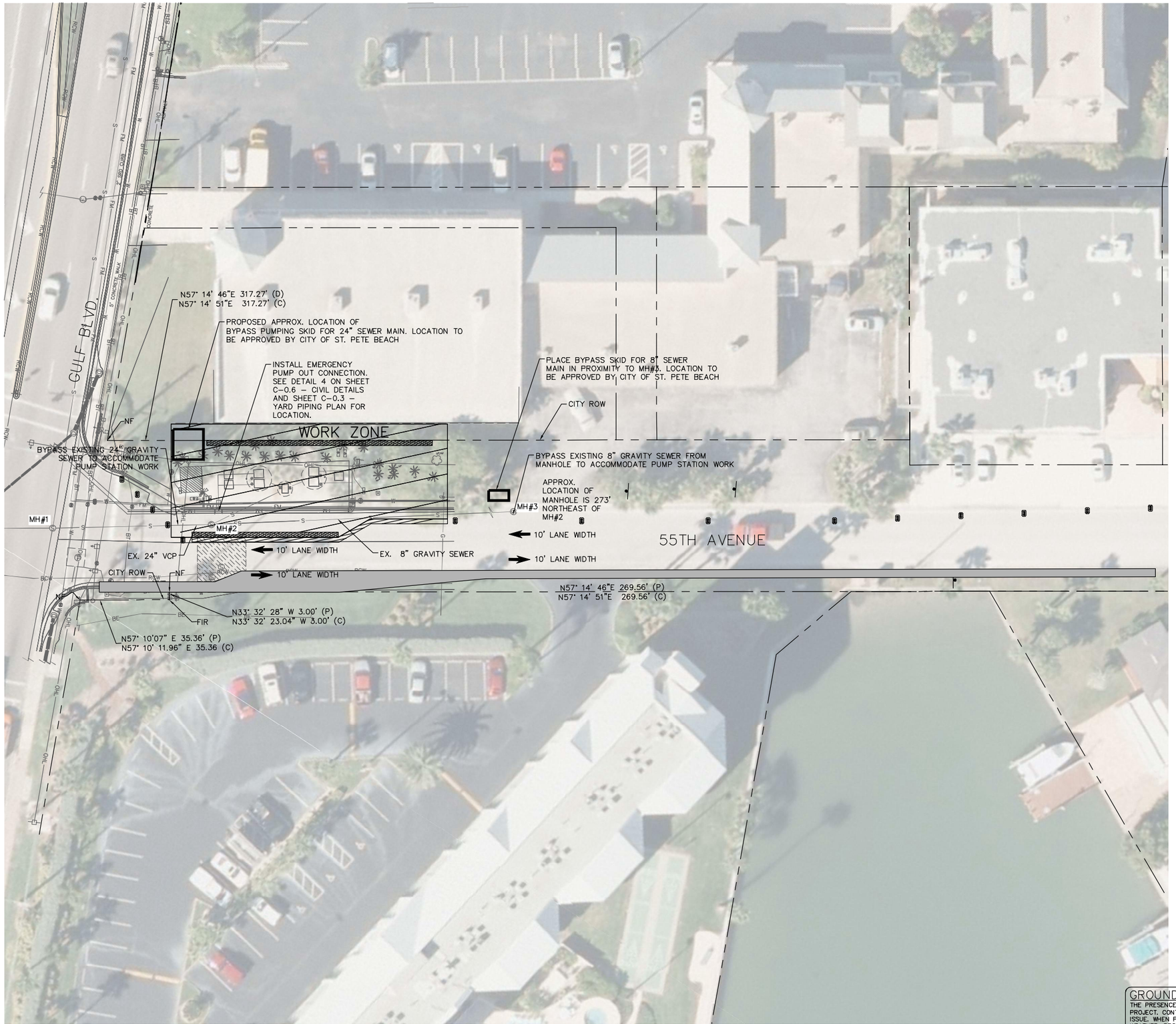

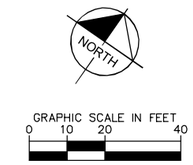

GENERAL NOTES:

1. CONTRACTOR SHALL FIELD VERIFY EXISTING CONDITIONS PRIOR TO BEGINNING CONSTRUCTION AND ORDERING EQUIPMENT. CONTRACTOR SHALL NOTIFY ENGINEER OF DISCREPANCIES.
2. 6" WATER MAIN TO BE CONSTRUCTED FIRST TO MEET MOT PLANS AND LANE WIDTH REQUIREMENTS
3. CONTRACTOR SHALL TAKE ALL PRECAUTIONARY MEASURES NECESSARY TO PROTECT EXISTING EQUIPMENT, UTILITIES, STRUCTURES, AND PERSONNEL FROM DAMAGE OR INJURY DURING CONSTRUCTION.
4. CONSTRUCTION SEQUENCE SHALL BE COORDINATED TO AVOID ANY PUMP STATION INTERRUPTION.
5. BY-PASS PUMPING WILL BE REQUIRED FROM TWO SEPARATE MANHOLES. COORDINATE ALL BY-PASS OPERATIONS WITH THE CITY OF ST. PETE BEACH.
6. CONTRACTOR TO REFER TO FDOT INDEX NO.S 613 AND 616 FOR DETAILS AND NOTES REGARDING MAINTENANCE OF TRAFFIC PLAN.
7. CONTRACTOR TO SUBMIT BYPASS PUMPING FOR REVIEW BY ENGINEER. INCLUDE ADDITIONAL PAVEMENT RESTORATION TO ACCOMODATE BYPASS PLAN.

BYPASS PUMP DESIGN REQUIREMENTS	
BYPASS	FLOW (GPM)
8" BYPASS	100 GPM
24" BYPASS	4000 GPM

MH NUMBER	RIM (FT)	INVERT (FT)
MH#1	4.60	24" RCP(NE)=(-)7.17 15" RCP(SW)=(-)2.60 18"RCP(SE)=(-)6.90 10" (NE)=(-)6.65
MH#2	4.62	30" DIP(NE)=(-)7.00 21" VCP(SW)=(-)7.33 8" CLAY(NE)=UNCONFIRMED
MH#3	3.80	8" CLAY(SW)=(-)5.69

GROUNDWATER / DEWATERING NOTE:
THE PRESENCE OF GROUNDWATER SHOULD BE ANTICIPATED ON THIS PROJECT. CONTRACTOR'S BID SHALL INCLUDE CONSIDERATION FOR THIS ISSUE. WHEN PERFORMING GRADING OPERATIONS DURING PERIODS OF WET WEATHER, PROVIDE ADEQUATE DEWATERING, DRAINAGE AND GROUND WATER MANAGEMENT TO CONTROL MOISTURE OF SOILS.

811 KNOW WHAT'S BELOW ALWAYS CALL 811 BEFORE YOU DIG
It's free. It's fast. It's free. It's the law.
www.callsunshine.com

No.	REVISIONS	DATE	BY

Kimley-Horn and Associates, Inc.
© 2013 KIMLEY-HORN AND ASSOCIATES, INC.
655 NORTH FRANKLIN STREET, SUITE 150, TAMPA, FL 33602
PHONE: 813-620-1460
WWW.KIMLEY-HORN.COM CA 00000696

DESIGN ENGINEER: WAYNE E. WHITE, P.E.
FLORIDA REGISTRATION NUMBER: 53232
DATE:

SCALE AS NOTED
DESIGNED BY JWW
DRAWN BY JRT
CHECKED BY WEW

BYPASS PUMPING PLAN

CITY OF ST. PETE BEACH
PUMP STATION NO.1 & 2
REHABILITATION
PINELLAS COUNTY FLORIDA

DATE
OCTOBER 2013

PROJECT NO.
148404000

SHEET NUMBER
G-0.5

Drawing name: K:\TAM_Civil\148404 - City of St. Pete Beach\000 - Pump Station No. 2\CADD\PlanSheets\G-05 BYPASS PLAN.dwg BYPASS PUMPING PLAN Oct 25, 2013 10:49am by: jordan.walker
This document, together with the concepts and designs presented herein, as an instrument of service, is intended only for the specific purpose and client for which it was prepared. Reuse of and improper reliance on this document without written authorization and adaptation by Kimley-Horn and Associates, Inc. shall be without liability to Kimley-Horn and Associates, Inc.

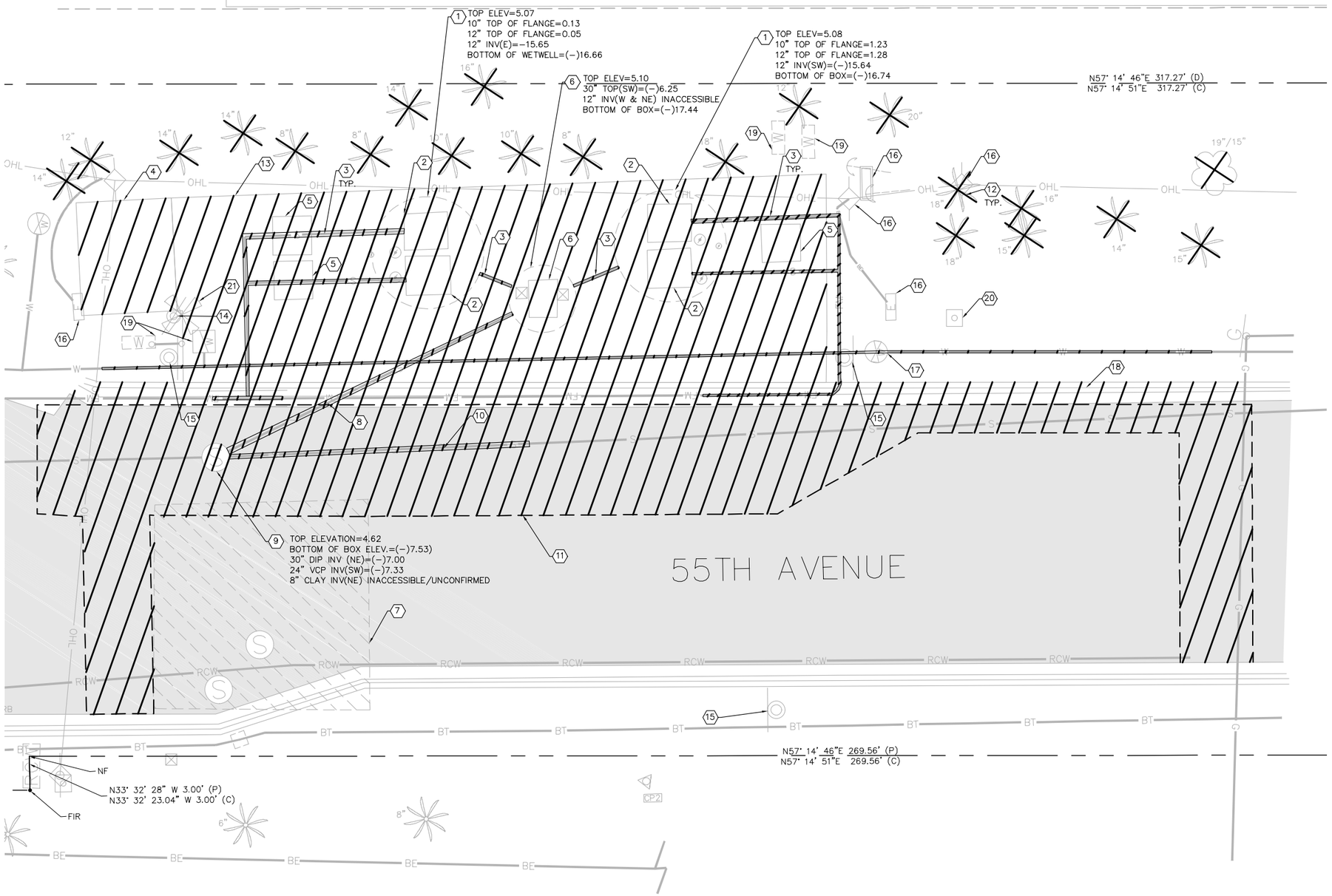

NORTH

GRAPHIC SCALE IN FEET
0 2.5 5 10

GENERAL NOTES:

1. CONTRACTOR SHALL FIELD VERIFY EXISTING CONDITIONS PRIOR TO BEGINNING CONSTRUCTION AND ORDERING EQUIPMENT. CONTRACTOR SHALL NOTIFY ENGINEER OF DISCREPANCIES.
2. CONTRACTOR SHALL TAKE ALL PRECAUTIONARY MEASURES NECESSARY TO PROTECT EXISTING EQUIPMENT, UTILITIES, STRUCTURES, AND PERSONNEL FROM DAMAGE OR INJURY DURING CONSTRUCTION.
3. CONSTRUCTION SEQUENCE SHALL BE COORDINATED TO AVOID ANY FLOW INTERRUPTION.
4. CONTRACTOR SHALL RELOCATE WATER AND RECLAIMED AND METERS AS REQUIRED TO MAINTAIN SERVICE TO NEW STATIONS.
5. UPON OWNER ACCEPTANCE OF THE NEW PUMP STATION, ALL EXISTING MECHANICAL PIPING AND EQUIPMENT SHALL BE REMOVED AND SALVAGED PER SPECIFICATIONS.
6. EXISTING WETWELLS SHALL BE DEMOLISHED, CLEANED, AND DISINFECTED. CONTRACTOR SHALL BE RESPONSIBLE FOR DISPOSAL OF ALL EQUIPMENT.
7. BY-PASS PUMPING WILL BE REQUIRED FROM TWO SEPARATE MANHOLES. COORDINATE ALL BY-PASS OPERATIONS WITH THE CITY OF ST. PETE BEACH.
8. CONTRACTOR IS RESPONSIBLE FOR DISPOSAL OF DEMOLISHED MATERIAL. DISPOSAL SHALL BE IN ACCORDANCE WITH ALL LOCAL, STATE AND FEDERAL REGULATIONS.

KEY NOTES:

1. REMOVE EXISTING CONCRETE WETWELL
2. REMOVE EXISTING PUMPS, ASSOCIATED PIPING AND VALVE INSIDE EXISTING WETWELL
3. REMOVE EXISTING PIPE, FITTINGS, VALVES, AND APPURTENANCES
4. REMOVE EXISTING ELECTRICAL AND CONTROL SYSTEM BUILDING, AND DEMOLISH CONCRETE PAD
5. REMOVE EXISTING VALVE VAULT, ASSOCIATED VALVES AND APPURTENANCES
6. REMOVE EXISTING SPLITTER BOX, SLUICE GATES, AND ASSOCIATED APPURTENANCES
7. EXISTING SANITARY WETWELL TO REMAIN
8. REMOVE EXISTING 30" DIP
9. REMOVE EXISTING SANITARY MANHOLE
10. EXISTING 8" CLAY PIPE TO BE REMOVED AND RELOCATED. SEE C-0.3 - YARD PIPING PLAN FOR DETAILS.
11. REMOVE AND REPLACE ASPHALT PAVEMENT. SEE DETAIL 6 ON SHEET C-0.7 - CIVIL DETAILS FOR STD DUTY RDWY.
12. REMOVE EXISTING TREES AS REQUIRED FOR CONSTRUCTION OF PROPOSED IMPROVEMENTS
13. DEMOLISH EXISTING CONCRETE PAD
14. REMOVE EXISTING HOSE BIB
15. RELOCATE EXISTING TRAFFIC SIGN. SEE C-0.1 - PUMP STATION 2 SITE PLAN FOR DETAILS.
16. RELOCATE EXISTING ELECTRICAL UTILITIES. CONTRACTOR TO COORDINATE WITH DUKE ENERGY BEFORE ANY MODIFICATIONS ARE MADE.
17. EXISTING 6" WATERMAIN AND VALVES TO BE REMOVED AND RELOCATED. SEE C-0.3 - YARD PIPING PLAN FOR DETAILS.
18. REMOVE EXISTING CONCRETE CURB
19. EXISTING WATER METERS, BACK FLOW PREVENTERS, AND SERVICE ASSEMBLY TO BE RELOCATED. SEE C-0.3 - YARD PIPING PLAN FOR DETAILS.
20. COORDINATE THE RELOCATION OF THE SERVICE BOX WITH BRIGHTHOUSE. CONTACT TED BINGHAM AT 727-329-2847.
21. REMOVE EXISTING ANTENNA

GROUNDWATER / DEWATERING NOTE:
THE PRESENCE OF GROUNDWATER SHOULD BE ANTICIPATED ON THIS PROJECT. CONTRACTOR'S BID SHALL INCLUDE CONSIDERATION FOR THIS ISSUE. WHEN PERFORMING GRADING OPERATIONS DURING PERIODS OF WET WEATHER, PROVIDE ADEQUATE DEWATERING, DRAINAGE AND GROUND WATER MANAGEMENT TO CONTROL MOISTURE OF SOILS.

811 KNOW WHAT'S BELOW ALWAYS CALL 811 BEFORE YOU DIG
It's fast. It's free. It's the law.
www.callsunshine.com

No.	REVISIONS	DATE	BY

Kimley-Horn and Associates, Inc.
© 2013 KIMLEY-HORN AND ASSOCIATES, INC.
655 NORTH FRANKLIN STREET, SUITE 150, TAMPA, FL 33602
PHONE: 813-620-1460
WWW.KIMLEY-HORN.COM CA 00000696

DESIGN ENGINEER: WAYNE E. WHITE, P.E.
FLORIDA REGISTRATION NUMBER: 53232
DATE:

SCALE AS NOTED
DESIGNED BY JWW
DRAWN BY JRT
CHECKED BY WEW

PUMP STATION 2 DEMOLITION PLAN

CITY OF ST. PETE BEACH
PUMP STATION NO.1 & 2 REHABILITATION
PINELLAS COUNTY FLORIDA

DATE OCTOBER 2013
PROJECT NO. 148404000
SHEET NUMBER D-0.1

Drawing name: K:\TAM_Civil\148404 - City of St. Pete Beach\000 - Pump Station No. 2\CADD\PlanSheets\D-01 DEMOLITION PLAN.dwg PUMP STATION 2 DEMOLITION PLAN Oct 25, 2013 9:59am by: jordan.walker
This document, together with the concepts and designs presented herein, as an instrument of service, is intended only for the specific purpose and client for which it was prepared. Reuse of and improper reliance on this document without written authorization and adaptation by Kimley-Horn and Associates, Inc. shall be without liability to Kimley-Horn and Associates, Inc.

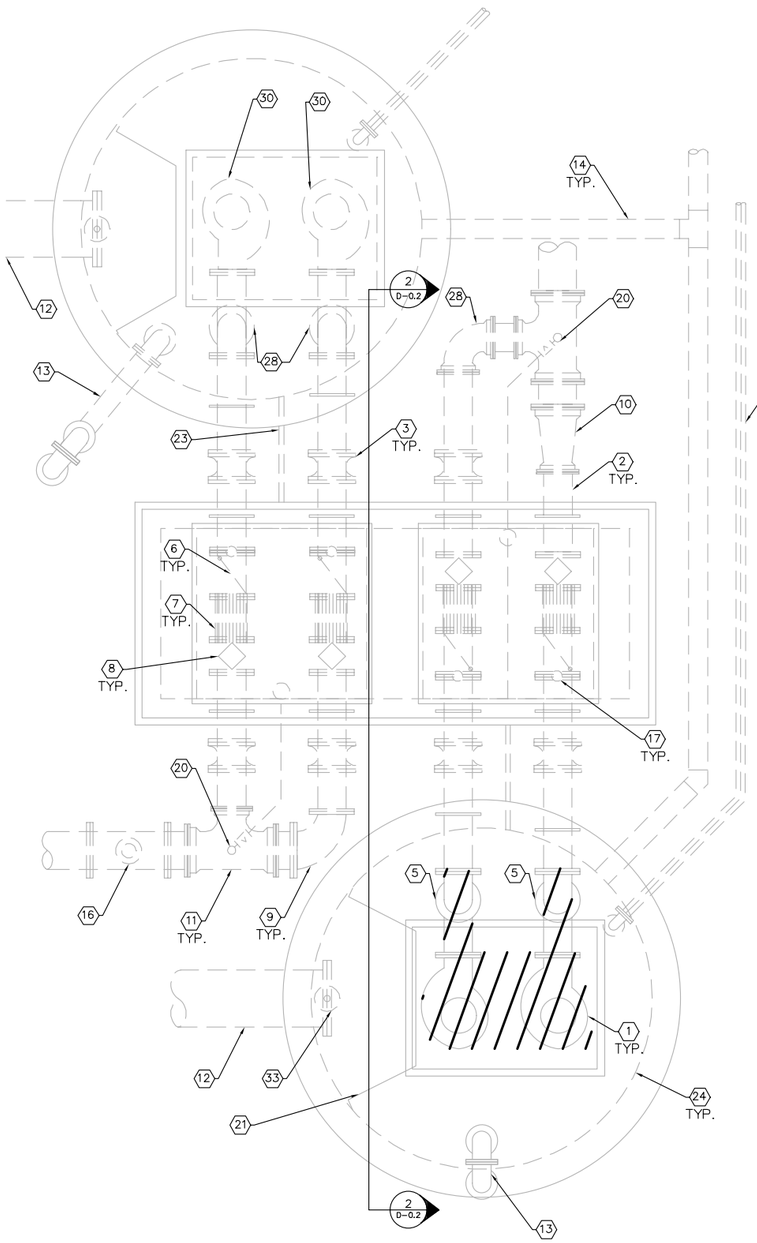

PLAN VIEW 1 D-0.2
3/16"= 1'-0"

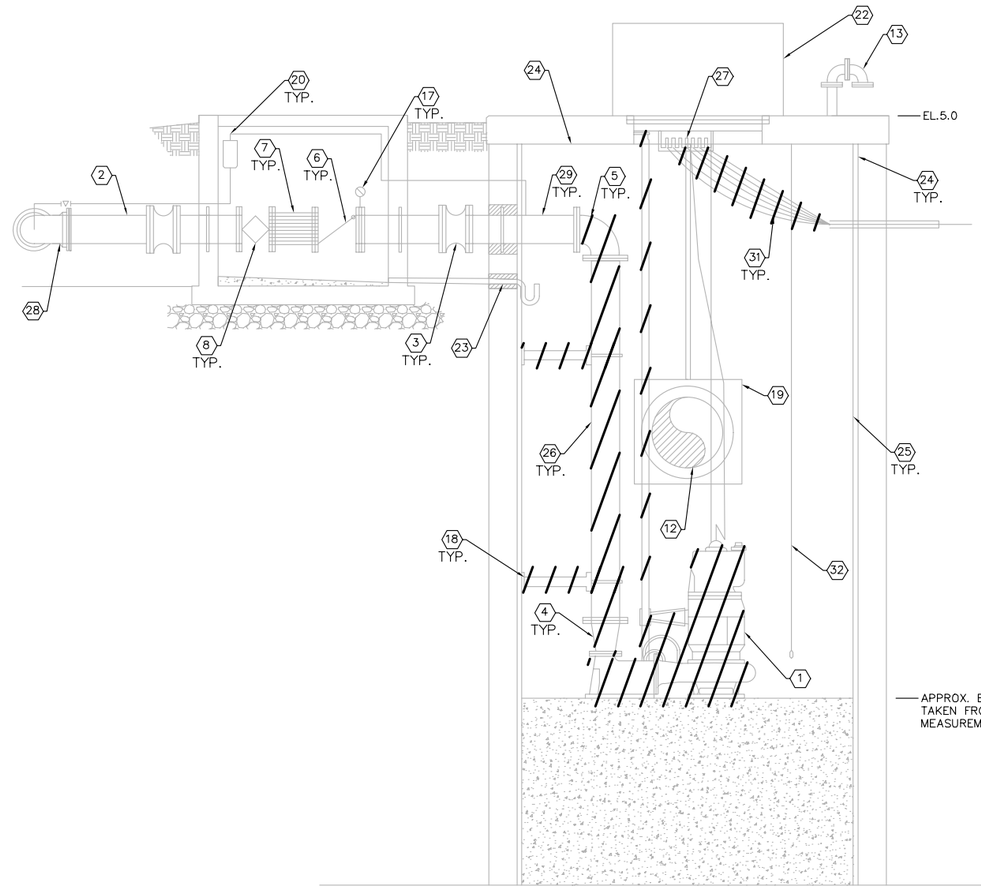

SECTION VIEW 2 D-0.2
N.T.S.

GENERAL NOTES:

1. CONTRACTOR SHALL FIELD VERIFY EXISTING CONDITIONS PRIOR TO BEGINNING CONSTRUCTION AND ORDERING EQUIPMENT. CONTRACTOR SHALL NOTIFY ENGINEER OF DISCREPANCIES.
2. CONTRACTOR SHALL TAKE ALL PRECAUTIONARY MEASURES NECESSARY TO PROTECT EXISTING EQUIPMENT, UTILITIES, STRUCTURES, AND PERSONNEL FROM DAMAGE OR INJURY DURING CONSTRUCTION.
3. CONSTRUCTION SEQUENCE SHALL BE COORDINATED TO AVOID ANY FLOW INTERRUPTION.
4. UPON OWNER ACCEPTANCE OF THE NEW PUMP STATION, ALL EXISTING MECHANICAL PIPING AND EQUIPMENT SHALL BE REMOVED AND SALVAGED PER SPECIFICATIONS.
5. CONTRACTOR IS RESPONSIBLE FOR DISPOSAL OF DEMOLISHED MATERIAL. DISPOSAL SHALL BE IN ACCORDANCE WITH ALL LOCAL, STATE AND FEDERAL REGULATIONS.
6. EXISTING DRAWING TRACED FROM FDEP PLANS PERMIT #C552-003369-030. DEVIATIONS FOUND FROM MEASUREMENTS ARE NOTED ON PLANS.
7. PRESSURE WASH AND CLEAN WETWELL ONCE EQUIPMENT IS REMOVED.

KEY NOTES

1. REMOVE EXISTING PUMPS, GUIDE RAILS, POWER CABLES, LIFTING CHAIN, BASE ELBOWS AND ASSOCIATED APPURTENANCES
2. EXISTING 12" DIP TO REMAIN
3. EXISTING 12" SHORT BODY MJ SLEEVE TO REMAIN
4. EXISTING 12" X 8" DIP TO BE REMOVED
5. EXISTING 12" DIP 90° BEND TO BE REMOVED
6. EXISTING 12" CHECK VALVE TO REMAIN
7. EXISTING 12" HFAC TO REMAIN
8. EXISTING 12" PLUG VALVE TO REMAIN
9. EXISTING 16" X 12" DIP REDUCING 90° BEND TO REMAIN
10. EXISTING 16" X 12" DIP REDUCER TO REMAIN
11. EXISTING 16"X16"X12" DIP TEE TO REMAIN
12. EXISTING 24" PVC PIPE TO REMAIN
13. EXISTING 8" PVC VENT AND ASSOCIATED BENDS TO REMAIN
14. EXISTING 8" HDPE DUCT AND ASSOCIATED BENDS TO REMAIN
15. EXISTING 4" HDPE DRAIN PIPE AND ASSOCIATED BENDS TO REMAIN
16. EXISTING 16"X16"X6" TEE, 6" DIP, 6" PV, AND 6" CAMLOCK W/ CAP AND CHAIN TO REMAIN
17. EXISTING PRESSURE GAUGE TO REMAIN
18. EXISTING WALL MOUNTED PIPE SUPPORTS TO REMOVED
19. EXISTING 24" X 24" SLUICE GATE TO REMAIN
20. EXISTING SEWER LINE, 2" SCAV, 2" PV TO REMAIN
21. FIBERGLASS INLET BAFFLE TO REMAIN
22. EXISTING ALUMINUM DOUBLE DOOR ACCESS HATCH TO REMAIN
23. EXISTING 4" PVC DRAIN AND ASSOCIATED P-TRAP TO REMAIN
24. EXISTING 12' DIA. WET WELL TO REMAIN IN PLACE
25. EXISTING PVC LINER TO REMAIN
26. EXISTING 12" DIP TO BE REMOVED. SEE SHEET M-0.2
27. EXISTING CABLE HOLDER TO REMAIN
28. EXISTING 12" DIP 90° BEND TO REMAIN
29. EXISTING 12" TO BE CUT. SEE SHEET M-0.2
30. EXISTING SUBMERSIBLE PUMPS TO REMAIN IN NORTH WET WELL
31. EXISTING PUMP POWER CABLES TO BE REMOVED
32. EXISTING POWER TRANSDUCER AND MECHANICAL FLOATS TO REMAIN
33. CLOSE SLIDE GATE AND USE NORTH WET WELL FOR DURATION OF CONSTRUCTION

GROUNDWATER / DEWATERING NOTE:
THE PRESENCE OF GROUNDWATER SHOULD BE ANTICIPATED ON THIS PROJECT. CONTRACTOR'S BID SHALL INCLUDE CONSIDERATION FOR THIS ISSUE. WHEN PERFORMING GRADING OPERATIONS DURING PERIODS OF WET WEATHER, PROVIDE ADEQUATE DEWATERING, DRAINAGE AND GROUND WATER MANAGEMENT TO CONTROL MOISTURE OF SOILS.

811 KNOW WHAT'S BELOW ALWAYS CALL 811 BEFORE YOU DIG
It's fast. It's free. It's the law.
www.callsunshine.com

No.	REVISIONS	DATE	BY

Kimley-Horn and Associates, Inc.
© 2013 KIMLEY-HORN AND ASSOCIATES, INC.
655 NORTH FRANKLIN STREET, SUITE 150, TAMPA, FL 33602
PHONE: 813-620-1460
WWW.KIMLEY-HORN.COM CA 00000696

DESIGN ENGINEER: WAYNE E. WHITE, P.E.
FLORIDA REGISTRATION NUMBER: 53232

SCALE AS NOTED
DESIGNED BY JWW
DRAWN BY JRT
CHECKED BY WEW
DATE:

PUMP STATION 1 DEMOLITION PLAN

CITY OF ST. PETE BEACH
PUMP STATION NO. 1 & 2
REHABILITATION
PINELLAS COUNTY FLORIDA

DATE
OCTOBER 2013

PROJECT NO.
148404001

SHEET NUMBER
D-0.2

Drawing name: K:\TAM_Civil\148404 - City of St. Pete Beach\001 - Pump Station No. 1\CADD\PlanSheets\D-0.1 - Replacement Plan.dwg PUMP STATION 1 DEMOLITION PLAN Oct 25, 2013 9:59am by: jordan.walker
This document, together with the concepts and designs presented herein, as an instrument of service, is intended only for the specific purpose and client for which it was prepared. Reuse of and improper reliance on this document without written authorization and adaptation by Kimley-Horn and Associates, Inc. shall be without liability to Kimley-Horn and Associates, Inc.

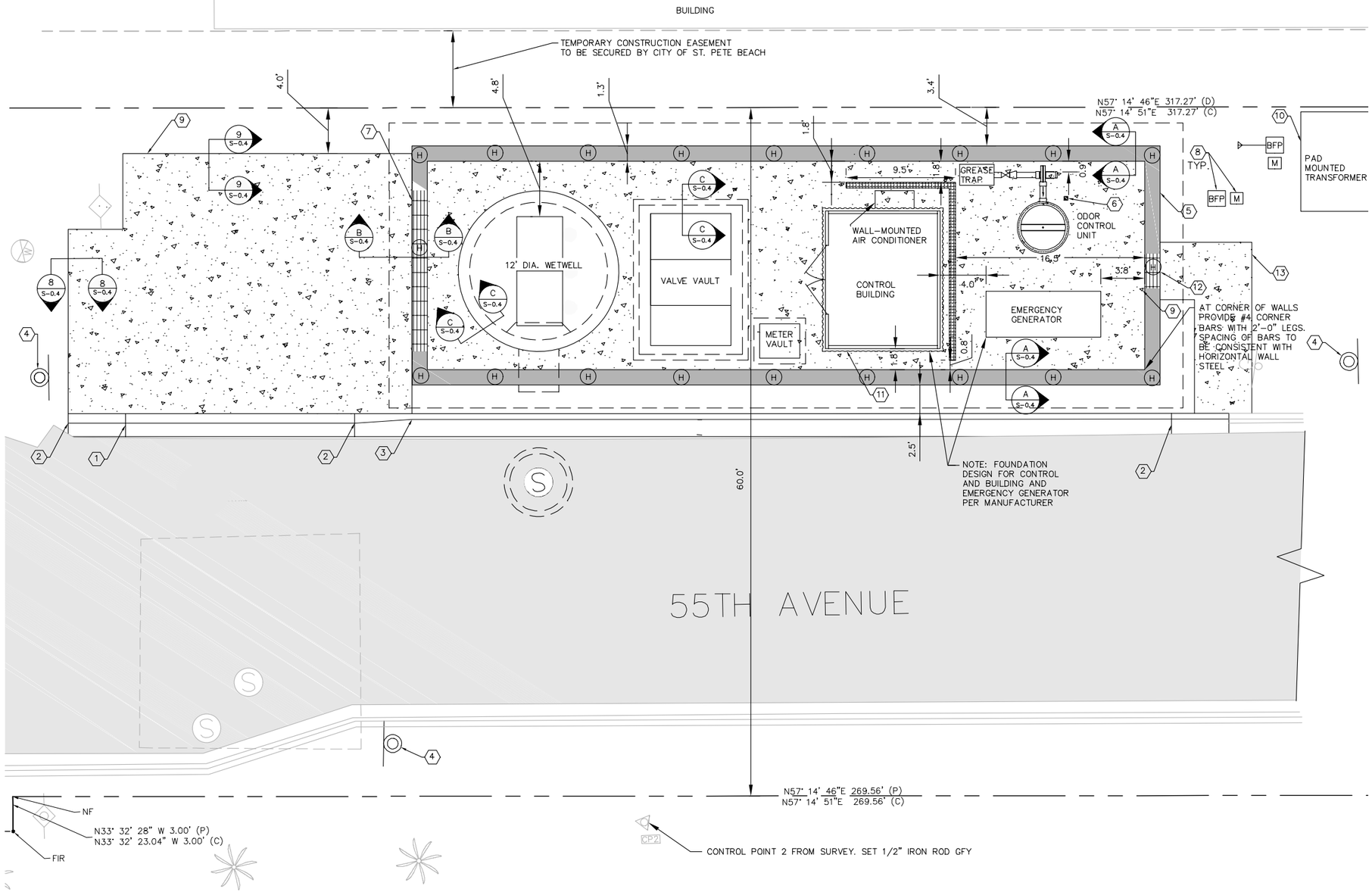

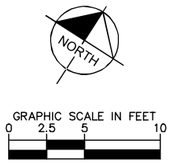

GENERAL NOTES:

1. CONTRACTOR SHALL FIELD VERIFY EXISTING CONDITIONS PRIOR TO BEGINNING CONSTRUCTION AND ORDERING EQUIPMENT. CONTRACTOR SHALL NOTIFY ENGINEER OF DISCREPANCIES.
2. CONTRACTOR SHALL TAKE ALL PRECAUTIONARY MEASURES NECESSARY TO PROTECT EXISTING EQUIPMENT, UTILITIES, STRUCTURES, AND PERSONNEL FROM DAMAGE OR INJURY DURING CONSTRUCTION.
3. CONSTRUCTION SEQUENCE SHALL BE COORDINATED TO AVOID ANY PUMP STATION INTERRUPTION.
4. BY-PASS PUMPING WILL BE REQUIRED FROM TWO SEPARATE MANHOLES. COORDINATE ALL BY-PASS OPERATIONS WITH THE CITY OF ST. PETE BEACH.

FLOODWALL NOTES:

1. FLOODWALL TO HAVE A SKIP TROWEL FINISH THAT MUST BE APPROVED BY CITY OF ST. PETE BEACH. THE SKIP TROWEL SURFACE WILL BE COATED WITH A CONCRETE STAIN. STAIN MUST BE APPROVED BY CITY OF ST. PETE BEACH.

KEY NOTES:

1. PROPOSED DROP CURB PER FDOT INDEX 300
2. PROPOSED 5' CURB TRANSITION
3. PROPOSED TYPE F CURB PER FDOT INDEX 300
4. RELOCATED TRAFFIC SIGN
5. PROPOSED 8" CONCRETE FLOOD WALL 7' HIGH
6. PROPOSED HOSE BIB ASSEMBLY. SEE DETAIL 6 ON SHEET M-0.2
7. PROPOSED 14' W X 7' H FLOOD GATE
8. RELOCATED METER AND BACKFLOW PREVENTER
9. PROPOSED CONCRETE SLAB. SEE STRUCTURAL DETAILS
10. APPROXIMATE LOCATION OF PAD MOUNTED TRANSFORMER INSTALLED BY DUKE ENERGY
11. MANUFACTURED PRECAST BUILDING TO BE INSTALLED PER SPECIFICATIONS
12. PROPOSED 3' W X 7' H FLOOD GATE FOR PEDESTRIAN ACCESS
13. PROPOSED 5' CONCRETE SIDEWALK

(H) APPROXIMATE LOCATION OF HELICAL ANCHORS BELOW WALLS (20 MINIMUM TOTAL, EVENLY SPACED). SEE DETAILS ON SHEET S-0.4 - STRUCTURAL DETAILS.

GROUNDWATER / DEWATERING NOTE:
THE PRESENCE OF GROUNDWATER SHOULD BE ANTICIPATED ON THIS PROJECT. CONTRACTOR'S BID SHALL INCLUDE CONSIDERATION FOR THIS ISSUE. WHEN PERFORMING GRADING OPERATIONS DURING PERIODS OF WET WEATHER, PROVIDE ADEQUATE DEWATERING, DRAINAGE AND GROUND WATER MANAGEMENT TO CONTROL MOISTURE OF SOILS.

811 KNOW WHAT'S BELOW ALWAYS CALL 811 BEFORE YOU DIG
It's fast. It's free. It's the law.
www.callsunshine.com

No.	REVISIONS	DATE	BY

Kimley-Horn and Associates, Inc.
© 2013 KIMLEY-HORN AND ASSOCIATES, INC.
655 NORTH FRANKLIN STREET, SUITE 150, TAMPA, FL 33602
PHONE: 813-620-1460
WWW.KIMLEY-HORN.COM CA 00000696

DESIGN ENGINEER: WAYNE E. WHITE, P.E.
FLORIDA REGISTRATION NUMBER: 53232
DATE:

SCALE AS NOTED
DESIGNED BY JWW
DRAWN BY JRT
CHECKED BY WEW

PUMP STATION 2 SITE PLAN

CITY OF ST. PETE BEACH
PUMP STATION NO.1 & 2 REHABILITATION
PINELLAS COUNTY FLORIDA

DATE OCTOBER 2013
PROJECT NO. 148404000
SHEET NUMBER C-0.1

Drawing name: K:\TAM_Civil\148404 - City of St. Pete Beach\000 - Pump Station No. 2\CADD\PlanSheets\C-01 SITE PLAN.dwg PUMP STATION 2 SITE PLAN Oct 25, 2013 9:59am by: jordan.walker
This document, together with the concepts and designs presented herein, as an instrument of service, is intended only for the specific purpose and client for which it was prepared. Reuse of and improper reliance on this document without written authorization and adaptation by Kimley-Horn and Associates, Inc. shall be without liability to Kimley-Horn and Associates, Inc.

Drawing name: K:\TAM_Civil\148404 – City of St. Pete Beach\001 – Pump Station No. 1\CADD\PlanSheets\C-0.2 PS1 SITE PLAN.dwg PUMP STATION 1 SITE PLAN Oct 25, 2013 9:59am by: jordan.walker
This document, together with the concepts and designs presented herein, as an instrument of service, is intended only for the specific purpose and client for which it was prepared. Reuse of and improper reliance on this document without written authorization and adaptation by Kimley-Horn and Associates, Inc. shall be without liability to Kimley-Horn and Associates, Inc.

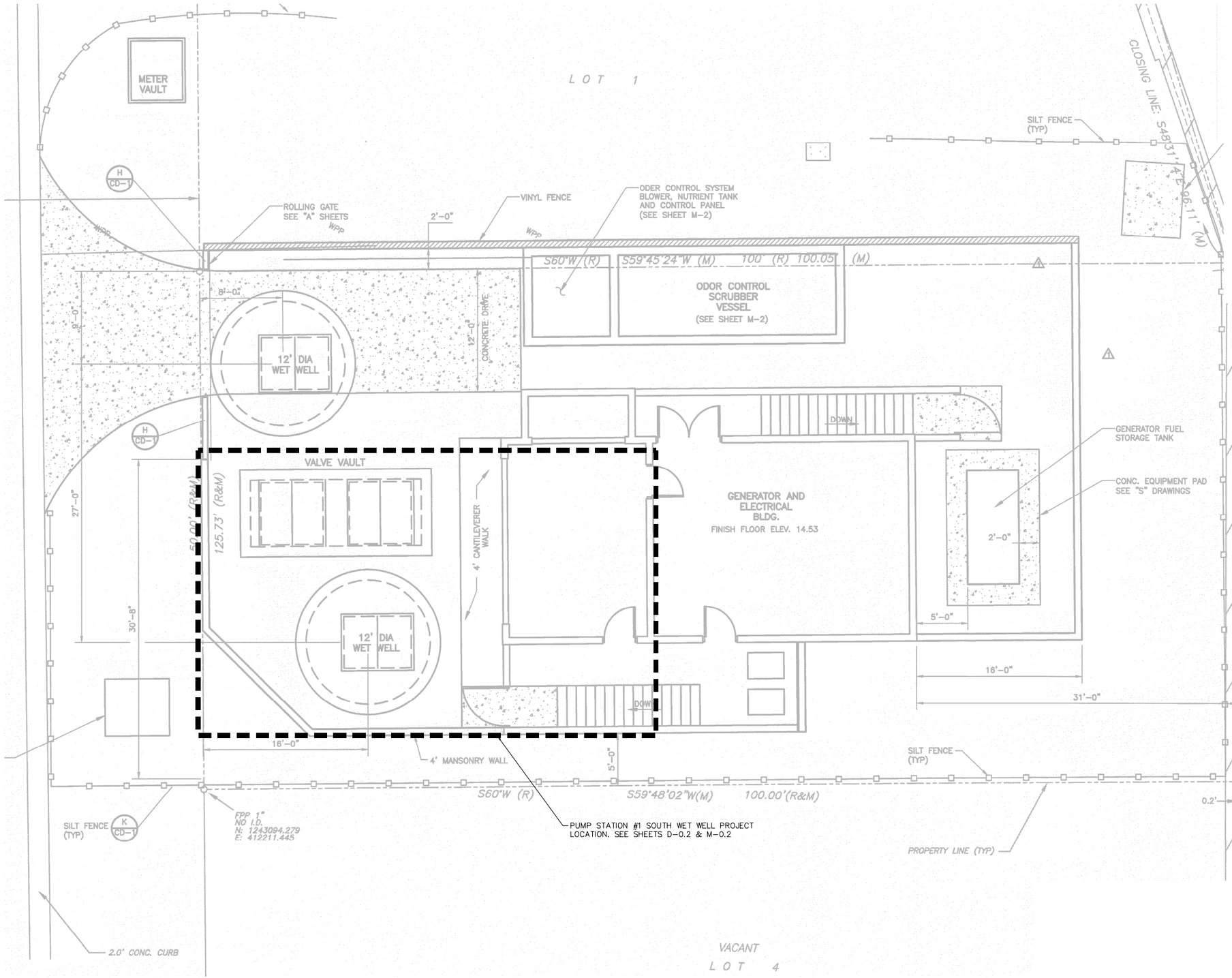

NORTH

GRAPHIC SCALE IN FEET
0 2.5 5 10

GENERAL NOTES:

1. CONTRACTOR SHALL FIELD VERIFY EXISTING CONDITIONS PRIOR TO BEGINNING CONSTRUCTION AND ORDERING EQUIPMENT. CONTRACTOR SHALL NOTIFY ENGINEER OF DISCREPANCIES.
2. CONTRACTOR SHALL TAKE ALL PRECAUTIONARY MEASURES NECESSARY TO PROTECT EXISTING EQUIPMENT, UTILITIES, STRUCTURES, AND PERSONNEL FROM DAMAGE OR INJURY DURING CONSTRUCTION.
3. CONSTRUCTION SEQUENCE SHALL BE COORDINATED TO AVOID ANY PUMP STATION INTERRUPTION.
4. EXISTING DRAWING TRACED FROM FDEP PLANS PERMIT #C552-003369-030. DEVIATIONS FOUND FROM FIELD MEASUREMENTS ARE NOTED ON PLANS.

GROUNDWATER / DEWATERING NOTE:
THE PRESENCE OF GROUNDWATER SHOULD BE ANTICIPATED ON THIS PROJECT. CONTRACTOR'S BID SHALL INCLUDE CONSIDERATION FOR THIS ISSUE. WHEN PERFORMING GRADING OPERATIONS DURING PERIODS OF WET WEATHER, PROVIDE ADEQUATE DEWATERING, DRAINAGE AND GROUND WATER MANAGEMENT TO CONTROL MOISTURE OF SOILS.

811 KNOW WHAT'S BELOW ALWAYS CALL 811 BEFORE YOU DIG
It's fast. It's free. It's the law.
www.callsunshine.com

No.	REVISIONS	DATE	BY

Kimley-Horn and Associates, Inc.
© 2013 KIMLEY-HORN AND ASSOCIATES, INC.
655 NORTH FRANKLIN STREET, SUITE 150, TAMPA, FL 33602
PHONE: 813-620-1460
WWW.KIMLEY-HORN.COM CA 00000696

DESIGN ENGINEER: WAYNE E. WHITE, P.E.
FLORIDA REGISTRATION NUMBER: 53232

SCALE AS NOTED
DESIGNED BY JWW
DRAWN BY JRT
CHECKED BY WEW
DATE:

PUMP STATION 1 SITE PLAN

CITY OF ST. PETE BEACH
PUMP STATION NO. 1 & 2 REHABILITATION
PINELLAS COUNTY FLORIDA

DATE OCTOBER 2013
PROJECT NO. 148404001
SHEET NUMBER C-0.2

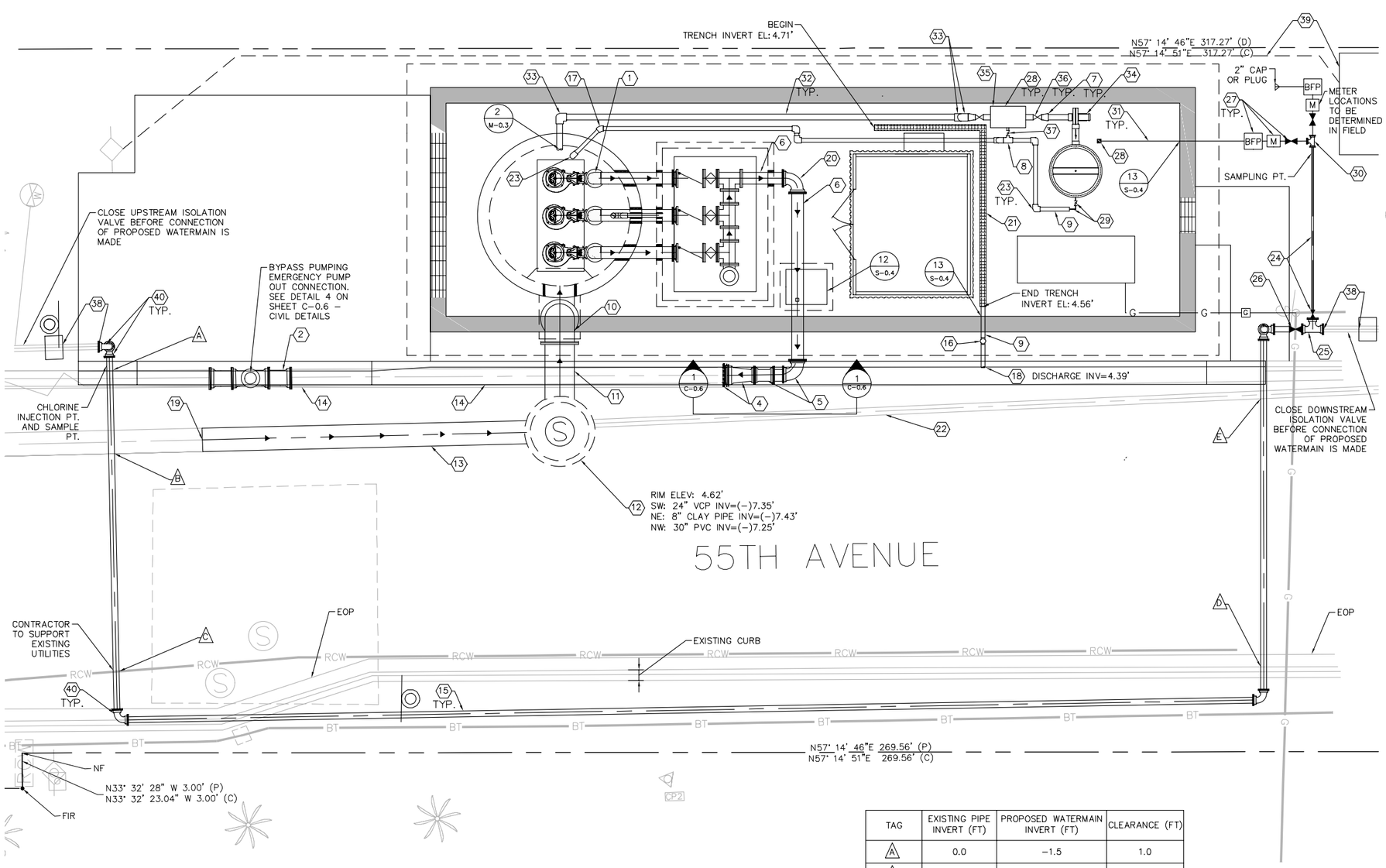

TAG	EXISTING PIPE INVERT (FT)	PROPOSED WATERMAIN INVERT (FT)	CLEARANCE (FT)
A	0.0	-1.5	1.0
B	-7.3	-1.5	3.8
C	APPROX. -1.5	-1.5	2.5
D	APPROX. -1.5	-1.5	2.5
E	-7.4	-1.5	5.2

NOTE: INSTALL VERTICAL PIPE AS NEEDED TO MATCH PROPOSED PIPE INVERT TO EXISTING PIPE INVERT AT CONNECTIONS

GRAPHIC SCALE IN FEET
0 2.5 5 10

NORTH

GENERAL NOTES:

1. CONTRACTOR SHALL FIELD VERIFY EXISTING CONDITIONS PRIOR TO BEGINNING CONSTRUCTION AND ORDERING EQUIPMENT. CONTRACTOR SHALL NOTIFY ENGINEER OF DISCREPANCIES.
2. CONTRACTOR SHALL TAKE ALL PRECAUTIONARY MEASURES NECESSARY TO PROTECT EXISTING EQUIPMENT, UTILITIES, STRUCTURES, AND PERSONNEL FROM DAMAGE OR INJURY DURING CONSTRUCTION.
3. CONSTRUCTION SEQUENCE SHALL BE COORDINATED TO AVOID ANY PUMP STATION INTERRUPTION.
4. BY-PASS PUMPING WILL BE REQUIRED FROM TWO SEPARATE MANHOLES. COORDINATE ALL BY-PASS OPERATIONS WITH THE CITY OF ST. PETE BEACH.

WATER MAIN GENERAL NOTES:

1. 6" WATER MAIN CAN NOT BE CONNECTED TO EXISTING MAIN UNTIL IT IS CLEARED BY FDEP. THE EXISTING 6" MAIN MUST REMAIN IN SERVICE FOR THE DURATION OF CONSTRUCTION AND CANNOT BE SHUT DOWN FOR EXTENDED PERIODS OF TIME.
2. ALL DUCTILE IRON PIPE AND FITTINGS SHALL BE POLY-WRAPPED IN 8MIL POLYETHYLENE, COLOR-CODED TO SERVICE.
3. PINELLAS COUNTY TO RELOCATE METER ASSEMBLIES. CONTRACTOR WILL BE RESPONSIBLE FOR INSTALLING SERVICE SADDLES AND WHIPS FOR THE METER ASSEMBLIES. CONTRACTOR WILL BE RESPONSIBLE FOR TYING CUSTOMER PLUMBING TO RELOCATED METERS.

KEY NOTES:

1. SEE SHEET M-0.1 FOR DETAILS REGARDING PIPING, PUMPS, AND ASSOCIATED APPURTENANCES INSIDE WETWELL AND VALVE VAULT
2. INSTALL 16" HDPE DR 11
3. CONNECT PROPOSED 16" DIP INTO EXISTING PIPING
4. INSTALL 16" X 12" DIP REDUCER AND HDPE ADAPTER FOR MJ. SEE DETAIL 1 ON SHEET C-0.6
5. INSTALL 12" DIP 90° BEND ROLLED 22.5°, 12" PVC C-900 DR 18, AND 12" 22.5° BEND. SEE DETAIL 1 ON SHEET C-0.6
6. INSTALL 12" PVC C-900 DR 18 PIPE
7. INSTALL PVC 6" X 4" REDUCER
8. INSTALL 4" X 4" X 2" PVC TEE
9. INSTALL 4" SDR 35 PVC PIPE
10. INSTALL 30" DROP CONNECTION. SEE DETAIL 7 ON SHEET S-0.1
11. INSTALL 30" SDR 35 PVC
12. INSTALL 5' DIA. PRECAST STANDARD MANHOLE. SEE DETAIL 6 ON SHEET C.06
13. INSTALL 24" VCP
14. EXISTING 16" HDPE
15. INSTALL 6" DIP
16. 4" PVC BACKWATER VALVE WITH EXTENSION
17. INSTALL 4" PVC C-900 DR 18 45° BEND
18. INSTALL DISCHARGE OUTLET THROUGH CURB. MATCH ELEVATION AT THE BOTTOM OF FACE OF CURB TO INVERT OF PIPE.
19. CONNECT PROPOSED 24" VCP INTO EXISTING PIPING. SEE DETAIL 8 ON SHEET M-0.3
20. INSTALL 12" DIP 90° BEND
21. INSTALL TYPE II TRENCH DRAIN PER FDOT INDEX #206
22. EXISTING 8" VCP
23. INSTALL 4" PVC 90° BEND
24. INSTALL 2" DIP AND 2" GATE VALVE
25. INSTALL 6"X6"x2" DIP TEE
26. INSTALL 6" GATE VALVE
27. INSTALL 2" GATE VALVE, WATER METER, AND BACKFLOW PREVENTER. SEE DETAIL 15 ON SHEET C-1.0
28. INSTALL HOSE BIB ASSEMBLY. SEE DETAIL 6 ON SHEET M-0.3
29. INSTALL 1/2" PVC CONDENSATION DRAIN, 1/2" PVC BALL VALVE, AND FITTINGS TO CONNECT INTO PROPOSED 4" PVC
30. INSTALL 2" DIP TEE
31. INSTALL 2" HDPE WATER SERVICE LINE
32. INSTALL 6" PVC DUCT
33. INSTALL 6" PVC 90° BEND
34. ALUMINUM BLOWER
35. GREASE TRAP
36. 4" PVC KNIFE GATE VALVE
37. 2" PVC BALL VALVE
38. CONNECT PROPOSED 6" DIP INTO EXISTING PIPING. SEE DEADMEN DETAIL 11 ON SHEET C-0.9
39. APPROXIMATE LOCATION OF PAD MOUNTS AND CONDUITS TO BE INSTALLED BY DUKE ENERGY
40. INSTALL 6" DIP 90° BEND

GROUNDWATER / DEWATERING NOTE:
THE PRESENCE OF GROUNDWATER SHOULD BE ANTICIPATED ON THIS PROJECT. CONTRACTOR'S BID SHALL INCLUDE CONSIDERATION FOR THIS ISSUE. WHEN PERFORMING GRADING OPERATIONS DURING PERIODS OF WET WEATHER, PROVIDE ADEQUATE DEWATERING, DRAINAGE AND GROUND WATER MANAGEMENT TO CONTROL MOISTURE OF SOILS.

811 KNOW WHAT'S BELOW ALWAYS CALL 811 BEFORE YOU DIG
It's fast. It's free. It's the law.
www.callsunshine.com

No.	REVISIONS	DATE	BY

Kimley-Horn and Associates, Inc.
© 2013 KIMLEY-HORN AND ASSOCIATES, INC.
655 NORTH FRANKLIN STREET, SUITE 150, TAMPA, FL 33602
PHONE: 813-620-1460
WWW.KIMLEY-HORN.COM CA 00000696

DESIGN ENGINEER: WAYNE E. WHITE, P.E.
FLORIDA REGISTRATION NUMBER: 53232
DATE:

SCALE AS NOTED
DESIGNED BY JWW
DRAWN BY JRT
CHECKED BY WEW

YARD PIPING PLAN

CITY OF ST. PETE BEACH
PUMP STATION NO.1 & 2
REHABILITATION
PINELLAS COUNTY FLORIDA

DATE OCTOBER 2013
PROJECT NO. 148404000
SHEET NUMBER C-0.3

Drawing name: K:\TAM_Civil\148404 - City of St Pete Beach\000 - Pump Station No. 2\CADD\PlanSheets\C-03 YARD PIPING PLAN.dwg YARD PIPING PLAN Oct 25, 2013 9:59am by: jordan.walker
This document, together with the concepts and designs presented herein, as an instrument of service, is intended only for the specific purpose and client for which it was prepared. Reuse of and improper reliance on this document without written authorization and adaptation by Kimley-Horn and Associates, Inc. shall be without liability to Kimley-Horn and Associates, Inc.

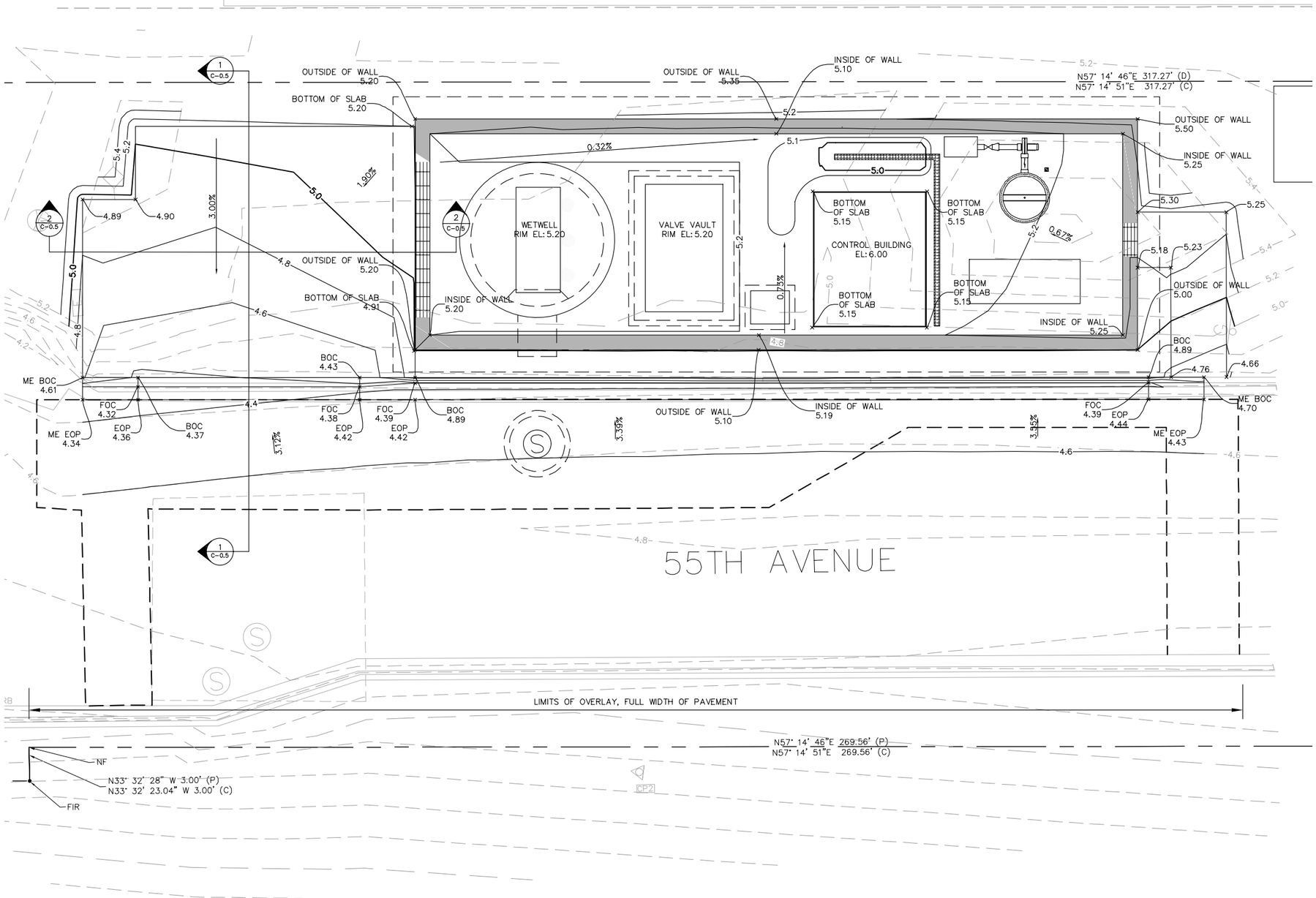

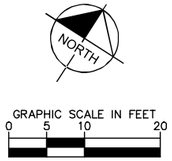

GENERAL NOTES:

1. CONTRACTOR SHALL FIELD VERIFY EXISTING CONDITIONS PRIOR TO BEGINNING CONSTRUCTION AND ORDERING EQUIPMENT. CONTRACTOR SHALL NOTIFY ENGINEER OF DISCREPANCIES.
2. CONTRACTOR SHALL TAKE ALL PRECAUTIONARY MEASURES NECESSARY TO PROTECT EXISTING EQUIPMENT, UTILITIES, STRUCTURES, AND PERSONNEL FROM DAMAGE OR INJURY DURING CONSTRUCTION.
3. CONSTRUCTION SEQUENCE SHALL BE COORDINATED TO AVOID ANY PUMP STATION INTERRUPTION.
4. BY-PASS PUMPING WILL BE REQUIRED FROM TWO SEPARATE MANHOLES. COORDINATE ALL BY-PASS OPERATIONS WITH THE CITY OF ST. PETE BEACH.
5. CONTRACTOR SHALL MILL AND OVERLAY ENTIRE WIDTH OF 55TH AVENUE AFTER PROPOSED IMPROVEMENTS HAVE BEEN CONSTRUCTED

GRADING LEGEND

EXISTING CONTOUR — 5.2 —

PROPOSED CONTOUR —— 5.2 ——

PROPOSED SPOT GRADE × 4.94

ABBREVIATIONS

BOC: BACK OF CURB
FOC: FACE OF CURB
EOP: EDGE OF PAVEMENT
ME: MATCH EXISTING

GROUNDWATER / DEWATERING NOTE:
THE PRESENCE OF GROUNDWATER SHOULD BE ANTICIPATED ON THIS PROJECT. CONTRACTOR'S BID SHALL INCLUDE CONSIDERATION FOR THIS ISSUE. WHEN PERFORMING GRADING OPERATIONS DURING PERIODS OF WET WEATHER, PROVIDE ADEQUATE DEWATERING, DRAINAGE AND GROUND WATER MANAGEMENT TO CONTROL MOISTURE OF SOILS.

811 KNOW WHAT'S BELOW ALWAYS CALL 811 BEFORE YOU DIG
It's fast. It's free. It's the law.
www.callsunshine.com

No.	REVISIONS	DATE	BY

Kimley-Horn and Associates, Inc.
© 2013 KIMLEY-HORN AND ASSOCIATES, INC.
655 NORTH FRANKLIN STREET, SUITE 150, TAMPA, FL 33602
PHONE: 813-620-1460
WWW.KIMLEY-HORN.COM CA 00000696

DESIGN ENGINEER: WAYNE E. WHITE, P.E.
FLORIDA REGISTRATION NUMBER: 53232
DATE:

SCALE AS NOTED
DESIGNED BY JWW
DRAWN BY JRT
CHECKED BY WEW

PAVING, GRADING, AND DRAINAGE PLAN

CITY OF ST. PETE BEACH
PUMP STATION NO.1 & 2
REHABILITATION
PINELLAS COUNTY FLORIDA

DATE
OCTOBER 2013

PROJECT NO.
148404000

SHEET NUMBER
C-0.4

Drawing name: K:\TAM_Civil\148404 - City of St. Pete Beach\000 - Pump Station No. 2\CADD\PlanSheets\C-04 PAVING, GRADING, AND DRAINAGE PLAN.dwg GRADING Oct 25, 2013 9:59am by: jordan.walker
This document, together with the concepts and designs presented herein, as an instrument of service, is intended only for the specific purpose and client for which it was prepared. Reuse of and improper reliance on this document without written authorization and adaptation by Kimley-Horn and Associates, Inc. shall be without liability to Kimley-Horn and Associates, Inc.

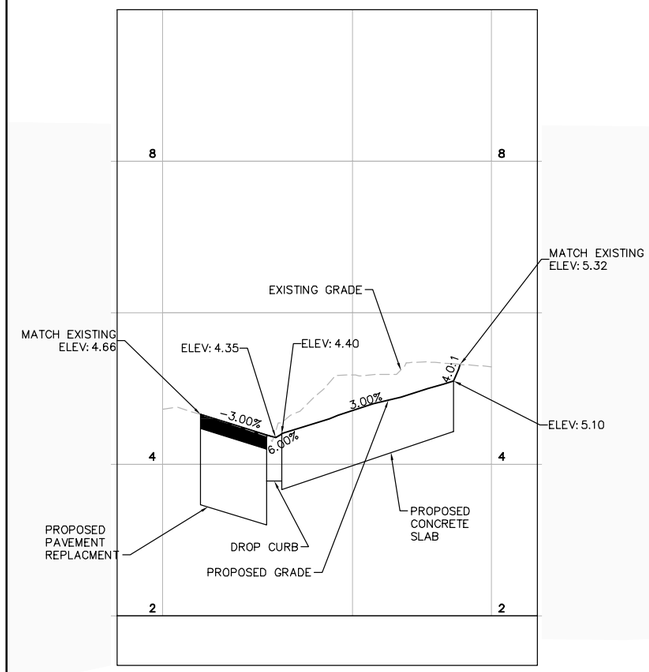

SECTION 1 (1 / C-0.5)
HORIZ: 1" = 20' VERT: 1"= 2'

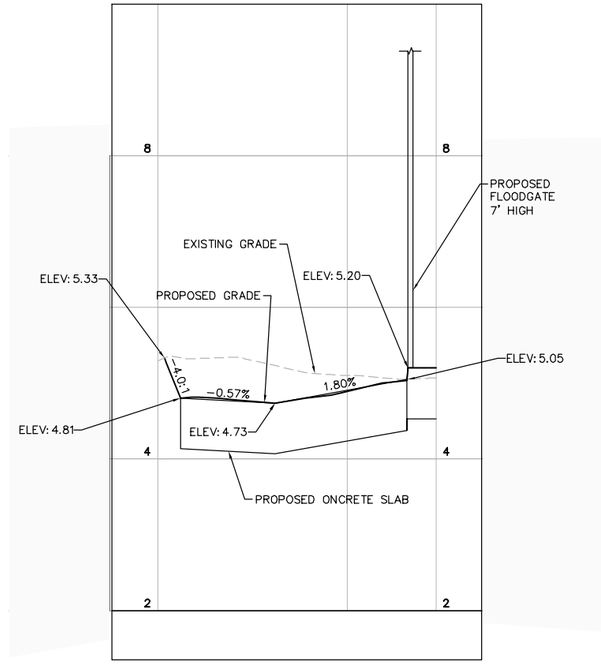

SECTION 2 (2 / C-0.5)
HORIZ: 1" = 20' VERT: 1"= 2'

GROUNDWATER / DEWATERING NOTE:
THE PRESENCE OF GROUNDWATER SHOULD BE ANTICIPATED ON THIS PROJECT. CONTRACTOR'S BID SHALL INCLUDE CONSIDERATION FOR THIS ISSUE. WHEN PERFORMING GRADING OPERATIONS DURING PERIODS OF WET WEATHER, PROVIDE ADEQUATE DEWATERING, DRAINAGE AND GROUND WATER MANAGEMENT TO CONTROL MOISTURE OF SOILS.

811 KNOW WHAT'S BELOW ALWAYS CALL 811 BEFORE YOU DIG
It's Good, It's Free, It's The Law.
www.callsunshine.com

No.	REVISIONS	DATE	BY

Kimley-Horn and Associates, Inc.
© 2013 KIMLEY-HORN AND ASSOCIATES, INC.
655 NORTH FRANKLIN STREET, SUITE 150, TAMPA, FL 33602
PHONE: 813-620-1460
WWW.KIMLEY-HORN.COM CA 00000696

DESIGN ENGINEER: WAYNE E. WHITE, P.E.
FLORIDA REGISTRATION NUMBER: 53232
DATE:

SCALE AS NOTED
DESIGNED BY JWW
DRAWN BY JRT
CHECKED BY WEW

GRADING SECTIONS

CITY OF ST. PETE BEACH
PUMP STATION NO .1 & 2
REHABILITATION
PINELLAS COUNTY FLORIDA

DATE
OCTOBER 2013

PROJECT NO.
148404000

SHEET NUMBER
C-0.5

Drawing name: K:\TAM_Civil\148404 - City of St. Pete Beach\000 - Pump Station No. 2\CADD\PlanSheets\C-05 - GRADING SECTIONS.dwg GRADING SECTIONS Oct 25, 2013 10:53am by: jordan.walker
This document, together with the concepts and designs presented herein, as an instrument of service, is intended only for the specific purpose and client for which it was prepared. Reuse of and improper reliance on this document without written authorization and adaptation by Kimley-Horn and Associates, Inc. shall be without liability to Kimley-Horn and Associates, Inc.

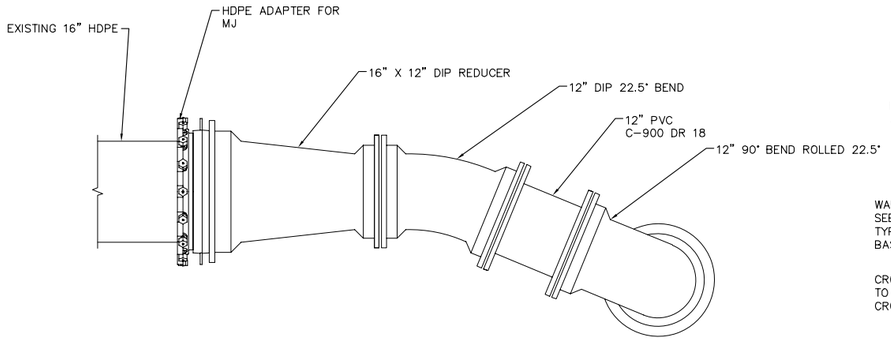

CONNECTION TO EXISTING 16 HDPE (1 / C-0.6)

N.T.S.

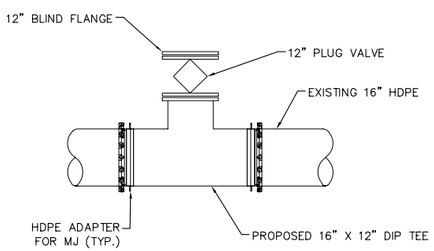

EMERGENCY PUMP OUT (4 / C-0.6)

N.T.S.

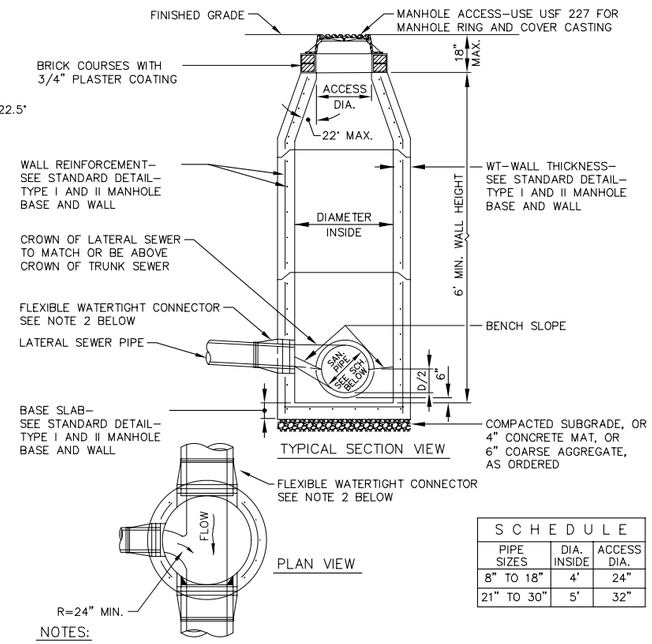

TYPICAL SECTION VIEW

PLAN VIEW

SCHEDULE		
PIPE SIZES	DIA. INSIDE	ACCESS DIA.
8" TO 18"	4'	24"
21" TO 30"	5'	32"

NOTES:

1. SEE SANITARY MANHOLE NOTES.
2. FLEXIBLE WATERTIGHT CONNECTORS SHALL BE "KWIK SEAL" OR "PSX: POSITIVE SEAL GASKET SYSTEM" AS MANUFACTURED BY THE PRESS SEAL GASKET CORPORATION, OR APPROVED EQUAL, OR "KOR–N–SEAL" I CONNECTORS FOR PIPE SIZES UPTO 15" AND "KOR–N–SEAL" II CONNECTORS FOR PIPE SIZES 18" TO 30", AS MANUFACTURED BY THE NPC INC., OR APPROVED EQUAL.

SANITARY MANHOLE NOTES

1. ALL MANHOLES SHALL BE BRICK, PRECAST CONCRETE OR FIBERGLASS REINFORCED POLYESTER (FRP), UNLESS OTHERWISE SHOWN OR APPROVED BY THE ENGINEER.
2. ALL PIPE STUBS FROM PRECAST MANHOLES, FOR FUTURE CONNECTIONS, SHALL BE INSTALLED WITH REMOVABLE WATERTIGHT PLUGS, PLACED FROM WITHIN THE MANHOLE.
3. ALL TYPE I CONE SECTIONS SHALL BE CONCENTRIC WITH RING CASTING CENTERED IN STRUCTURE, UNLESS OTHERWISE SHOWN OR DIRECTED BY THE ENGINEER.
4. THE CONE SECTION OF TYPE I PRECAST MANHOLE SHALL BE PRECAST.
5. NO PIPE SHALL BE IN THE MANHOLE CONE SECTION.
6. ALL MANHOLES WITH SLAB TOP SHALL BE TYPE II, SEE STANDARD DETAIL–TYPE II MANHOLE TOP SLAB.
7. A DROP MANHOLE SHALL BE REQUIRED WHEN THE INVERT OF ANY INCOMING PIPE IS 24" OR MORE ABOVE THE INVERT OF THE MANHOLE. ALL DROP PIPE SHALL BE ON THE OUTSIDE OF THE MANHOLE.
8. PRIOR TO PRECASTING STRUCTURES THE PRECASTER SHALL SUBMIT SITE SPECIFIC INDIVIDUAL SHOP DRAWINGS FOR APPROVAL. SHOP DRAWINGS SUBMITTED FOR NONSTANDARD STRUCTURES OR STRUCTURES THAT DEVIATE FROM THE STANDARD DETAILS MUST BE DESIGNED AND CERTIFIED BY A REGISTERED FLORIDA PROFESSIONAL ENGINEER.
9. PRECAST MANHOLES SHALL CONSIST OF A MINIMUM NUMBER OF SECTIONS, AS APPROVED BY THE ENGINEER.
10. ALL PRECAST STRUCTURES SHALL HAVE AN INTEGRAL FLOOR AND BASE RISER SECTION, SEE STANDARD DETAIL–TYPE I AND II MANHOLE BASE AND WALL.
11. SEE STANDARD DETAIL–PRECAST STRUCTURE JOINT ASSEMBLY AND STRUCTURE SEALING .
12. ALL EXPOSED EDGES TO HAVE A 3/4" CHAMFER.
13. FOR THE APPLICABLE RING AND COVER, USE US FOUNDARY MODEL USF–227.
14. PRECAST BASE SECTION SHALL BE INSTALLED ON A CONCRETE MAT WITHIN 2 HOURS OF PLACEMENT OF THE MAT.
15. ALL BRICK SHALL BE CLAY BRICK AND SHALL HAVE A MINIMUM 3/4" CEMENT PLASTER ON ALL SURFACES.
16. BENCH SHALL SLOPE @ 1:12 MINIMUM.
17. PRIOR TO MANUFACTURING OF FRP MANHOLE, MANUFACTURER SHALL SUBMIT SIGNED AND SEALED SHOP DRAWINGS FOR THE DESIGN OF INVERT AND BENCH AREA, PIPE CONNECTIONS, FABRICATION DETAILS AND INSTALLATION METHODS FOR APPROVAL.
18. ADDITIONAL REINFORCEMENT IS REQUIRED IN ALL TYPE II MANHOLE WALLS WITH OPENINGS FOR PIPES. THE VERTICAL AND HORIZONTAL WALL REINFORCEMENT DISPLACED DUE TO OPENINGS SHALL BE REPLACED WITH ADDITIONAL REINFORCEMENT BARS ABOVE, BELOW, AND ON BOTH SIDES OF OPENINGS, EQUAL IN AREA TO THOSE DISPLACED. REPLACEMENT REINFORCEMENT SHALL BE PLACED WITH 3" CLEARANCE TO THE EDGES OF OPENINGS.
19. FRP MANHOLE INVERT AND BENCH SHALL BE CONCRETE.
20. FRP STIFFENING RIBS ARE REQUIRED AT 10' DEPTH OR MORE.

STANDARD PRECAST MANHOLE DETAIL (2 / C-0.6)

N.T.S.

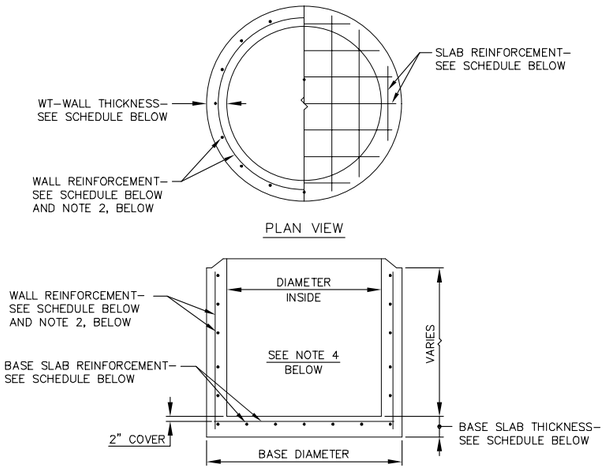

TYPICAL SECTION

SCHEDULE					
DIAMETER INSIDE	BASE DIAMETER	WT WALL THICKNESS	WALL REINFORCEMENT	BASE SLAB THICKNESS	BASE SLAB REINFORCEMENT
4'	5'–0"	6"	#4 @ 12" EW	8"	#6 @ 12" EW
5' (3)	6'–4"	8"	#4 @ 12" EW	8"	#6 @ 12" EW
6'	7'–4"	8"	#4 @ 12" EW	8"	#6 @ 12" EW
7'	8'–4"	8"	#4 @ 12" EW	8"	#6 @ 10" EW
8'	9'–4"	8"	#4 @ 12" EW	10"	#6 @ 10" EW

NOTES:

1. FOR GENERAL NOTES, SEE STANDARD DETAIL–SANITARY STRUCTURE NOTES.
2. OPTIONAL WALL REINFORCEMENT MAY BE WELDED WIRE AS PER ASTM C–478 OR ASTM C–76, CLASS III, B WALL, WITH WHERE THE REINFORCEMENT CAGE IN THE CENTER 1/3 OF THE WALL.
3. MAXIMUM SIZE ALLOWED FOR TYPE I MANHOLE. 6', 7', AND 8' DIAMETER SHALL BE TYPE II MANHOLE.
4. ADD 2 #4 REINFORCING BARS AT 3" CENTERS AT THE TOP AND SIDES OF ALL WALL OPENINGS.

TYPE I AND II MANHOLE BASE AND WALL DETAIL (3 / C-0.6)

N.T.S.

GROUNDWATER / DEWATERING NOTE:
THE PRESENCE OF GROUNDWATER SHOULD BE ANTICIPATED ON THIS PROJECT. CONTRACTOR'S BID SHALL INCLUDE CONSIDERATION FOR THIS ISSUE. WHEN PERFORMING GRADING OPERATIONS DURING PERIODS OF WET WEATHER, PROVIDE ADEQUATE DEWATERING, DRAINAGE AND GROUND WATER MANAGEMENT TO CONTROL MOISTURE OF SOILS.

811 KNOW WHAT'S BELOW ALWAYS CALL 811 BEFORE YOU DIG
It's fast. It's free. It's the law.
www.callsunshine.com

No.	REVISIONS	DATE	BY

Kimley-Horn and Associates, Inc.
© 2013 KIMLEY-HORN AND ASSOCIATES, INC.
655 NORTH FRANKLIN STREET, SUITE 150, TAMPA, FL 33602
PHONE: 813-620-1460
WWW.KIMLEY-HORN.COM CA 00000696

SCALE AS NOTED

CIVIL DETAILS

CITY OF ST. PETE BEACH
PUMP STATION NO.1 & 2
REHABILITATION
PINELLAS COUNTY FLORIDA

DATE OCTOBER 2013

PROJECT NO. 148404000

SHEET NUMBER C-0.6

Drawing name: K:\TAM_Civil\148404 – City of St. Pete Beach\000 – Pump Station No. 2\CADD\PlanSheets\C-05 DETAILS.dwg CIVIL DETAILS Oct 25, 2013 10:00am by: jordan.walker
This document, together with the concepts and designs presented herein, as an instrument of service, is intended only for the specific purpose and client for which it was prepared. Reuse of and improper reliance on this document without written authorization and adaptation by Kimley-Horn and Associates, Inc. shall be without liability to Kimley-Horn and Associates, Inc.

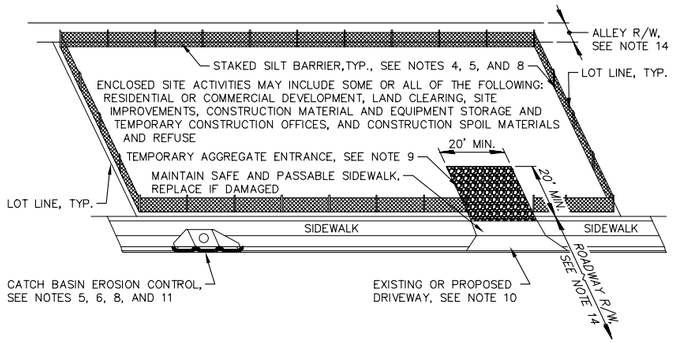

TYPICAL PLAN VIEW

NOTES:

1. NON-CONFORMANCE WITH THE ITEMS LISTED OR SHOWN ON THIS DETAIL MAY RESULT IN A "STOP WORK"
2. THE PURPOSE OF THIS DETAIL IS TO ASSIST THE DEVELOPER, BUILDER, AND/OR CONTRACTOR TO MEET THE MINIMUM REQUIREMENTS OF THE NATIONAL POLLUTANT DISCHARGE ELIMINATION SYSTEM (NPDES) PERMIT ISSUED TO THE CITY OF ST. PETERSBURG.
3. THIS DETAIL IS APPLICABLE FOR ALL CONSTRUCTION SITES AS DESCRIBED ABOVE OF LESS THAN ONE (1) ACRE; THOSE SITES GREATER THAN ONE (1) ACRE ALSO MUST OBTAIN COVERAGE UNDER AN NPDES
4. THE SILT BARRIER SHALL BE INSTALLED ONE FOOT INSIDE THE PROPERTY LINE OR TWO FEET FROM THE SIDEWALK AS SHOWN ABOVE. FOR SILT BARRIER REQUIREMENTS AND INSTALLATION REQUIREMENTS, SEE STANDARD DETAIL-STAKED SILT BARRIER; DRAWING NO. S40-92.
5. INSPECT AND MAINTAIN ALL EROSION CONTROL DEVICES DAILY AND/OR AFTER A RAINFALL.
6. FOR CURB INLET FILTER REQUIREMENTS, SEE STANDARD DETAIL-CURB INLET FILTER FOR EROSION CONTROL AT CATCH BASIN; DWG. NO. S40-93, OR FOR HAY BALE REQUIREMENTS, SEE STANDARD DETAIL-HAY BALES FOR EROSION CONTROL AT CATCH BASIN; DWG. NO. S40-94.
7. EXISTING GRASS VEGETATION SHALL BE MAINTAINED AT A 10 INCH HEIGHT OR LESS, AS PER CITY CODE, CHAPTER 16; SECTIONS 16-1070 THRU 1076.
8. ALL SOIL EROSION CONTROL DEVICES MUST REMAIN IN PLACE UNTIL NEW VEGETATION IS ESTABLISHED. ALL DISTURBED AREAS SHALL BE SODDED AFTER FINAL GRADING.
9. TEMPORARY AGGREGATE ENTRANCE SHALL BE A MINIMUM 6" THICK OF STANDARD GRADATION SIZE #1 OR #2 RANGE AS PER FDOT SECTION 901, AND SHALL BE COMPACTED. AGGREGATE SHALL BE QUARTZ OR CRUSHED GRANITE. LIMEROCK, DOLOMITE OR SANDSTONE SHALL NOT BE ACCEPTABLE.
10. IF THERE IS NO EXISTING DRIVEWAY OR AN ALTERNATE INGRESS/EGRESS IS TO BE USED DURING CONSTRUCTION, THE METHOD OF ACCESS SHALL CONFORM TO THE "TEMPORARY AGGREGATE ENTRANCE" AS DESCRIBED ABOVE. IF THE AGGREGATE IS DEEMED UNSAFE, THE ALTERNATE INGRESS/EGRESS SHALL BE CONSTRUCTED OF 1" ASPHALTIC CONCRETE OVER 6" OF COMPACTED LIMEROCK BASE.
11. REGULARLY REMOVE COLLECTED SEDIMENT AND DEBRIS FROM THE SILT BARRIERS AND GUTTER FLOW LINE.
12. FOR ALL SAND AND SOIL STOCKPILES DUST/EROSION CONTROL MEASURES SHALL BE IMPLEMENTED.
13. KEEP CONSTRUCTION SITE LITTER/DEBRIS, AND LEAKING CONTAINERS IN ORDERLY CONTAINMENT AREAS.
14. SWEEP ENTRANCE AND ADJACENT ROADWAY WEEKLY TO KEEP FREE OF CONSTRUCTION DEBRIS.
15. SWEEP PAVED SURFACES ONLY. DO NOT WASH DOWN UNTIL SITE IS FINISHED.
16. SINGLE FAMILY INFILL LOTS MAY REQUIRE SILT FENCE AS ORDERED OR DIRECTED BY THE CITY BUILDING OFFICIAL.

SITE DEVELOPMENT AND CONSTRUCTION STAGING SITE EROSION CONTROL DETAIL (5 / C-0.7)

N.T.S.

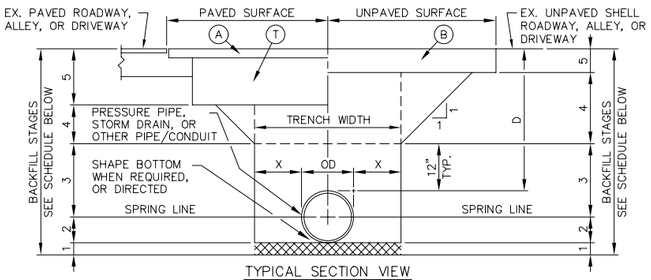

TYPICAL SECTION VIEW

SCHEDULE

STAGE NO.	MATERIALS
1	BEDDING: WHERE DIRECTED, REPLACE EXISTING MATERIAL WITH 4" TO 6" OF GRANULAR MATERIAL. THE GRANULAR MATERIAL MAY BE ANY OF THE FOLLOWING: CLEAN NATIVE SAND, CONCRETE SAND, GRAVEL, OR RECLAIMED CONCRETE. SEE NOTE 1, BELOW. BOX CULVERTS SHALL HAVE MANDATORY STONE BEDDING PER SPECIFICATIONS.
2	PIPE BEDDING/HAUNCHING: NATIVE SAND IN 6" LIFTS. WHERE DIRECTED, REPLACE EXISTING MATERIAL WITH CLEAN CONSTRUCTION SAND, OR GRAVEL. SEE NOTE 2, BELOW
3	INITIAL BACKFILL: NATIVE SAND IN 6" LIFTS. WHERE DIRECTED, REPLACE EXISTING MATERIAL WITH CLEAN CONSTRUCTION SAND, SEE NOTE 2, BELOW
4	TRENCH BACKFILL: NATIVE SAND IN LIFTS AS LISTED BELOW- WHERE DIRECTED, REPLACE EXISTING MATERIAL WITH CLEAN CONSTRUCTION SAND. PAVED ROADWAYS, PAVED DRIVEWAYS, AND PAVED ALLEYS IN 6" LIFTS UNPAVED ROADWAYS, UNPAVED DRIVEWAYS, UNPAVED ALLEYS, AND SIDEWALKS IN 6" LIFTS SOD, OR MULCHED SURFACES IN 12" LIFTS
5	SURFACE RESTORATION: AS SHOWN BELOW. ALSO SEE NOTES BELOW FOR OTHER STANDARD DETAIL REFERENCES.

PRESSURE PIPE	X	STORM DRAIN-RCP, ERCP, B/C	X	OTHER PIPE/CONDUIT	X
4"	12"	UPTO 18"	12"	UPTO 5"	(2) OR (3)
6"	12"	21" TO 36"	18"	6" TO 18"	12"
8"	12"	42" TO 72"	24"	21" TO 36"	18"
12"	12"	BEYOND 72"	(2) OR (3)	42" TO 72"	24"
16"	12"	--------	------	------	------

	ITEM	ALLEY OR D/W	STD DUTY RDWY	HVY DUTY RDWY	BRICK RDWY	REMARKS
A	SURFACE PAVING MIN. THICKNESS	1" ASPHALT	2.25" ASPHALT	2.25" ASPHALT	ROADWAY BRICK	
B	SURFACE COVER MIN. THICKNESS	6" SHELL	6" SHELL	N/A	N/A	SOD
T	BASE MATERIAL MIN. THICKNESS	LMRK/SHELL-9" RCLM. CONC. 10.5"	LMRK/SHELL-12" RCLM. CONC. 14"	LMRK/SHELL-16" RCLM. CONC. 19"	1" SAND OVER 12" SHELL BASE	BASE MAT. MAY BE ASPH. EXCEPT W/ BRICK RDWY
D	COVER MIN. DEPTH	PRESS. PIPE-36" ALL OTHER PIPE-30"	PRESS. PIPE-36" ALL OTHER PIPE-30"	PRESS. PIPE-36" ALL OTHER PIPE-36"	PRESS. PIPE-36" ALL OTHER PIPE-30"	

NOTES:

1. ALL BEDDING TYPES REQUIRE AN IMPERMEABLE GROUNDWATER BARRIER AT 100' INTERVALS ALONG THE TRENCH LENGTH.
2. GRAVEL OR RECLAIMED CONCRETE SHOULD NOT CONTACT DUCTILE IRON OR POLYVINYL PIPE OR CONDUIT.
3. FOR PAVED SURFACES SEE STANDARD DETAIL-FLEXIBLE PAVEMENT RESTORATION.
4. FOR UNPAVED SURFACES SEE STANDARD DETAIL-RIGHT-OF-WAY RESTORATION.

PIPE BEDDING DETAIL (6 / C-0.7)

N.T.S.

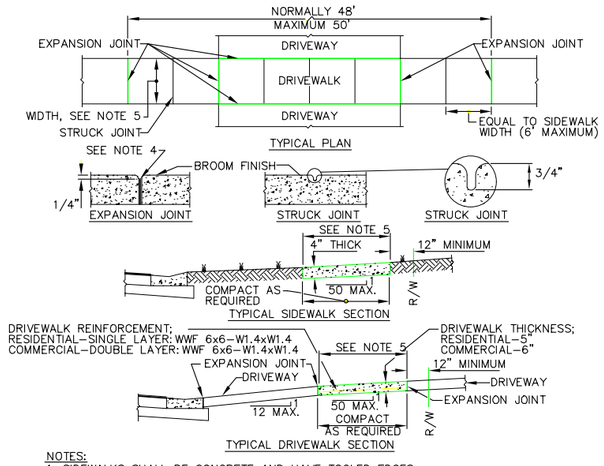

NOTES:

1. SIDEWALKS SHALL BE CONCRETE AND HAVE TOOLED EDGES.
2. RESTORATION AND UTILITY CUTS SHALL BE A MINIMUM FULL PANEL BETWEEN EXISTING JOINTS.
3. EXPANSION JOINTS SHALL BE INSTALLED WHERE SHOWN AND AT 50' MAXIMUM SPACING.
4. EXPANSION JOINTS SHALL CONSIST OF CONTINUOUS 1/2"x6" MINIMUM, BITUMINOUS EXPANSION STRIP.
5. SIDEWALKS SHALL CONFORM TO CITY CODE SECTION 16-857 AS FOLLOWS: SIDEWALKS SHALL BE REQUIRED ON BOTH SIDES OF ALL MAJOR ARTERIAL AND COLLECTOR STREETS; ON THE NORTH AND WEST SIDES OF ALL LOCAL STREETS, COMMERCIAL SERVICE STREET; AND LOCAL STREETS LEADING TO SCHOOLS, PARKS, SHOPPING CENTERS, CHURCHES, AND OTHER PUBLIC FACILITIES. SIDEWALK WIDTHS SHALL BE NOT LESS THAN THE FOLLOWING:
   A-6' ALONG ARTERIAL AND COLLECTOR ROADWAYS.
   B-4' ALONG ROADWAYS NOT DESIGNATED ON TRAFFIC CORRIDORS MAP, IN RESIDENTIAL AND INDUSTRIAL ZONES.*
   C-5' ALONG ROADWAYS NOT DESIGNATED ON THE TRAFFIC CORRIDORS MAP, IN COMMERCIAL AND OFFICE ZONES.*
   D-4' FOR PEDESTRIAN CROSSWALKS.
   E-12' FOR PEDESTRIAN/BICYCLE JOINT USE.
   *-ALL SIDEWALKS ABUTTING CURBS SHALL BE 6' WIDE, MININUM.

SIDEWALK AND DRIVEWALK CONSTRUCTION DETAIL (7 / C-0.7)

N.T.S.

GROUNDWATER / DEWATERING NOTE:

THE PRESENCE OF GROUNDWATER SHOULD BE ANTICIPATED ON THIS PROJECT. CONTRACTOR'S BID SHALL INCLUDE CONSIDERATION FOR THIS ISSUE. WHEN PERFORMING GRADING OPERATIONS DURING PERIODS OF WET WEATHER, PROVIDE ADEQUATE DEWATERING, DRAINAGE AND GROUND WATER MANAGEMENT TO CONTROL MOISTURE OF SOILS.

811 KNOW WHAT'S BELOW ALWAYS CALL 811 BEFORE YOU DIG
It's fast. It's free. It's the law.
www.callsunshine.com

No.	REVISIONS	DATE	BY

Kimley-Horn and Associates, Inc.
© 2013 KIMLEY-HORN AND ASSOCIATES, INC.
655 NORTH FRANKLIN STREET, SUITE 150, TAMPA, FL 33602
PHONE: 813-620-1460
WWW.KIMLEY-HORN.COM CA 00000696

SCALE AS NOTED

CIVIL DETAILS

CITY OF ST. PETE BEACH
PUMP STATION NO.1 & 2
REHABILITATION
PINELLAS COUNTY FLORIDA

DATE OCTOBER 2013

PROJECT NO. 148404000

SHEET NUMBER C-0.7

Drawing name: K:\TAM_Civil\148404 - City of St. Pete Beach\000 - Pump Station No. 2\CADD\PlanSheets\C-06 DETAILS.dwg CIVIL DETAILS Oct 25, 2013 10:00am by: jordan.walker
This document, together with the concepts and designs presented herein, as an instrument of service, is intended only for the specific purpose and client for which it was prepared. Reuse of and improper reliance on this document without written authorization and adaptation by Kimley-Horn and Associates, Inc. shall be without liability to Kimley-Horn and Associates, Inc.

NOTES:
1. ALL MATERIALS SHALL BE IN ACCORDANCE WITH THE LATEST P.C.U. APPROVED MATERIAL SPECIFICATION.
2. MANUAL. THIS TABLE SHALL BE UTILIZED FOR ALL PRESSURE MAIN INSTALLATIONS. ALL FITTINGS SHALL BE RESTRAINED TO THE LENGTHS INDICATED, AT A MINIMUM.
3. THIS TABLE WAS DEVELOPED USING THE FOLLOWING ASSUMPTIONS:
   - D.I. PIPE WITH POLY WRAP
   - SAFETY FACTOR OF 1.5 TO 1
   - TEST PRESSURE OF 150 P.S.I.
   - SOIL TYPE = S.M.
   - TYPE 3 TRENCH
   - DEPTH OF COVER = 2.5' UP TO 18" AND 3' FOR 20" AND ABOVE.
4. WHEN A TEE HAS A VALVE ON THE RUN, THE BRANCH AND THE RUNS SHALL BE RESTRAINED AS A 90° BEND FOR THE SIZE OF THE PIPE.
5. ALL BENDS, TEES, AND VALVES SHALL BE RESTRAINED ON EACH SIDE OF THE FITTING.
6. ALL RESTRAINED PIPE LENGTHS ARE IN FEET.
7. "F" REPRESENTS THE RESTRAINED JOINTS AT THE FITTINGS.
8. HDPE TRANSITION VALVE IS FOR STRAIGHT TIE-INS, IF A BEND IS USED, THE VALVE FOR THE BEND MUST BE ADDED.
9. LINE VALVES SHALL BE RESTRAINED UPSTREAM AND DOWNSTREAM AS A DEAD END.

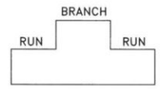

PIPE SIZE	FITTINGS					
	TEE BRANCH ONLY	90°	45°	22½°	11¼°	DEAD END
2"	F	40	17	F	F	40
4"	19	49	20	10	5	49
6"	33	69	28	14	7	69
8"	58	88	37	18	9	88
10"	76	107	44	21	11	107
12"	93	125	52	25	12	125
14"	110	142	59	28	14	142
16"	127	159	66	32	16	159
18"	143	175	73	35	17	175
20"	132	164	68	33	16	164
24"	159	192	79	38	19	192
30"	195	229	95	46	23	229
36"	230	264	109	53	26	264

PRESSURE MAIN RESTRAINED JOINT

FITTINGS			
REDUCERS			LARGER PIPE
LG. SIZE	SM. SIZE	LENGTH	
4"	2"	17'	24
6"	4"	50'	35
8"	4"	91'	64
	6"	53'	37
10"	4"	123'	87
	6"	93'	66
	8"	51'	36
12"	4"	154'	108
	6"	129'	91
	8"	94'	66
	10"	52'	37
14"	6"	160'	113
	8"	131'	92
	10"	95'	67
	12"	52'	36
16"	6"	190'	134
	8"	165'	116
	10"	134'	94
	12"	96'	67
	14"	52'	36
18"	8"	196'	137
	10"	169'	118
	12"	135'	95
	14"	96'	67
	16"	51'	36
20"	10"	172'	121
	12"	147'	103
	14"	117'	82
	16"	82'	58
	18"	44'	30
24"	12"	201'	141
	14"	177'	124
	16"	149'	104
	18"	117'	82
	20"	82'	57
30"	18"	206'	144
	20"	178'	125
	24"	115'	80
36"	20"	258'	180
	24"	207'	144
	30"	114'	80

PINELLAS COUNTY
DEPARTMENT OF ENVIRONMENT AND INFRASTRUCTURE
(D.E.I.)
PRESSURE MAIN RESTRAINED JOINT DETAIL

DETAIL INDEX I.D.: PCU GD 11
DATE: SEPTEMBER/2012
DIV. DIRECTOR OF ENG. & TECH. SUPPORT
REVISION:

RESTRAINED JOINT LENGTHS (8 / C-0.8)
N.T.S.

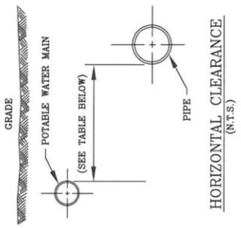

HORIZONTAL CLEARANCE
(N.T.S.)

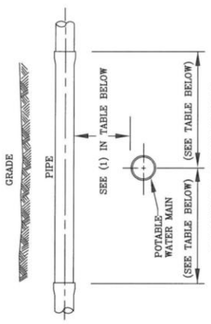

VERTICAL CLEARANCE
(N.T.S.)

PIPE	HORIZONTAL SEPARATION	CROSSINGS (1)	JOINT SPACING @ CROSSINGS
VACUUM-TYPE SANITARY SEWER, STORMWATER FORCE MAIN, RECLAIMED WATER (2)	3 FT. MINIMUM	12 INCHES IS THE MINIMUM, EXCEPT WHEN POTABLE WATER IS ABOVE, THEN 6 INCHES IS THE MINIMUM AND 12 INCHES IS PREFERRED	(FULL JOINT CENTERED, ALTERNATE 3 FT. MINIMUM FROM ALL JOINTS)
GRAVITY OR PRESSURE SANITARY SEWER, SANITARY SEWER FORCE MAIN, RECLAIMED WATER (4)	10 FT. PREFERRED 6 FT. MINIMUM (3)	12 INCHES IS THE MINIMUM, EXCEPT WHEN POTABLE WATER IS ABOVE, THEN 6 INCHES IS THE MINIMUM AND 12 INCHES IS PREFERRED	(FULL JOINT CENTERED, ALTERNATE 6 FT. MINIMUM FROM ALL JOINTS)
ON-SITE SEWAGE TREATMENT & DISPOSAL SYSTEM	10 FT. MINIMUM	-	-

NOTES: (IN ACCORDANCE WITH F.A.C., RULE. 62-555.314)
1. POTABLE WATER MAIN SHOULD CROSS ABOVE OTHER PIPE. WHEN POTABLE WATER MAIN MUST BE BELOW OTHER PIPE, THE MINIMUM SEPARATION IS 12 INCHES.
2. RECLAIMED WATER REGULATED UNDER PART III OF CHAPTER 62-610, F.A.C.
3. 3 FT. FOR GRAVITY SANITARY SEWER WHERE THE BOTTOM OF THE WATER MAIN IS ABOVE THE TOP OF THE SANITARY SEWER AS PER TABLE 1 OF 62-604.130(7)(b), F.A.C.
4. RECLAIMED WATER NOT REGULATED UNDER PART III OF CHAPTER 62-610, F.A.C.
5. ALL MATERIALS SHALL BE IN ACCORDANCE WITH THE LATEST APPROVED MATERIALS SPECIFICATIONS MANUAL.EE

PINELLAS COUNTY
DEPARTMENT OF ENVIRONMENT AND INFRASTRUCTURE
(D.E.I.)
MAIN CLEARANCES DETAIL

DETAIL INDEX I.D.: PCU GD 2
DATE: SEPTEMBER/2012
DIV. DIRECTOR OF ENG. & TECH. SUPPORT
REVISION:

MAIN CLEARANCES DETAIL (9 / C-0.8)
N.T.S.

NOTES:
1. ALL MATERIALS SHALL BE IN ACCORDANCE WITH THE LATEST P.C.U. APPROVED MATERIAL SPECIFICATION MANUAL.
2. LOCATION OF SAMPLE POINT BIBB SHALL NOT BE WITHIN LIMITS OF ROADWAY BUT ROUTED TO ROADWAY SHOULDER (NON-TRAFFIC AREA)
3. CONTRACTOR SHALL UTILIZE SERVICE LINE CONNECTIONS, WHERE POSSIBLE.
4. WHEN UTILIZING TEMPORARY SAMPLE POINT AS A SERVICE CONNECTION, THEN A TRACER WIRE IS REQUIRED.
5. SAMPLE POINTS TO BE ABANDONED AFTER USE SHALL BE FITTED WITH A ¾" CC x F.I.P. CORP. STOP.
6. REMOVE ALL PIPE AND ABOVE GROUND FITTINGS AND PLUG CORP. STOP WITH ¾" PLUG.

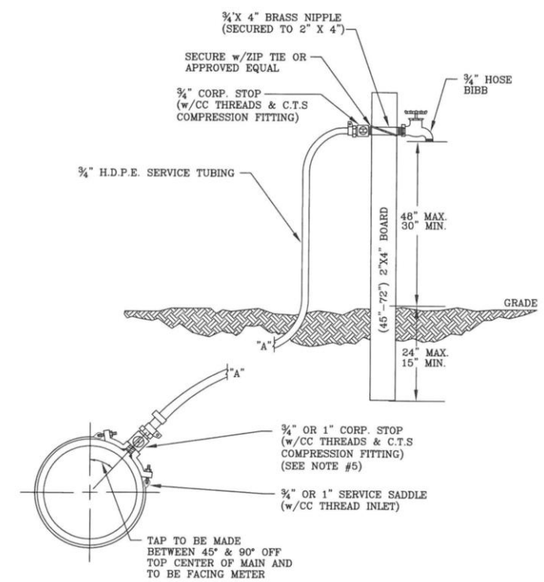

PINELLAS COUNTY
DEPARTMENT OF ENVIRONMENT AND INFRASTRUCTURE
(D.E.I.)
TEMPORARY SAMPLING POINT DETAIL

DETAIL INDEX I.D.: PCU WD 1
DATE: SEPTEMBER/2012
DIV. DIRECTOR OF ENG. & TECH. SUPPORT
REVISION:

TEMPORARY SAMPLING DETAIL (10 / C-0.8)
N.T.S.

GROUNDWATER / DEWATERING NOTE:
THE PRESENCE OF GROUNDWATER SHOULD BE ANTICIPATED ON THIS PROJECT. CONTRACTOR'S BID SHALL INCLUDE CONSIDERATION FOR THIS ISSUE. WHEN PERFORMING GRADING OPERATIONS DURING PERIODS OF WET WEATHER, PROVIDE ADEQUATE DEWATERING, DRAINAGE AND GROUND WATER MANAGEMENT TO CONTROL MOISTURE OF SOILS.

811 KNOW WHAT'S BELOW ALWAYS CALL 811 BEFORE YOU DIG
It's fast. It's free. It's the law.
www.callsunshine.com

No.	REVISIONS	DATE	BY

Kimley-Horn and Associates, Inc.

© 2013 KIMLEY-HORN AND ASSOCIATES, INC.

655 NORTH FRANKLIN STREET, SUITE 150, TAMPA, FL 33602
PHONE: 813-620-1460
WWW.KIMLEY-HORN.COM CA 00000696

SCALE AS NOTED

CIVIL DETAILS

CITY OF ST. PETE BEACH
PUMP STATION NO.1 & 2
REHABILITATION
PINELLAS COUNTY FLORIDA

DATE
OCTOBER 2013

PROJECT NO.
148404000

SHEET NUMBER
C-0.8

Drawing name: K:\TAM_Civil\148404 - City of St. Pete Beach\000 - Pump Station No. 2\CADD\PlanSheets\C-07 DETAILS.dwg CIVIL DETAILS Oct 25, 2013 10:00am by: jordan.walker
This document, together with the concepts and designs presented herein, as an instrument of service, is intended only for the specific purpose and client for which it was prepared. Reuse of and improper reliance on this document without written authorization and adaptation by Kimley-Horn and Associates, Inc. shall be without liability to Kimley-Horn and Associates, Inc.

NOTES:
1. ALL MATERIALS SHALL BE IN ACCORDANCE WITH THE LATEST APPROVED MATERIAL SPECIFICATION MANUAL.
2. FITTING CONNECTION TO EXISTING PIPE AND REVERSE DEADMAN MUST BE PART OF ONE INTEGRAL JOINT OF PIPE.
3. REVERSE DEADMAN FOR 16" AND LARGER PIPES SHALL BE DESIGNED BY ENGINEER.

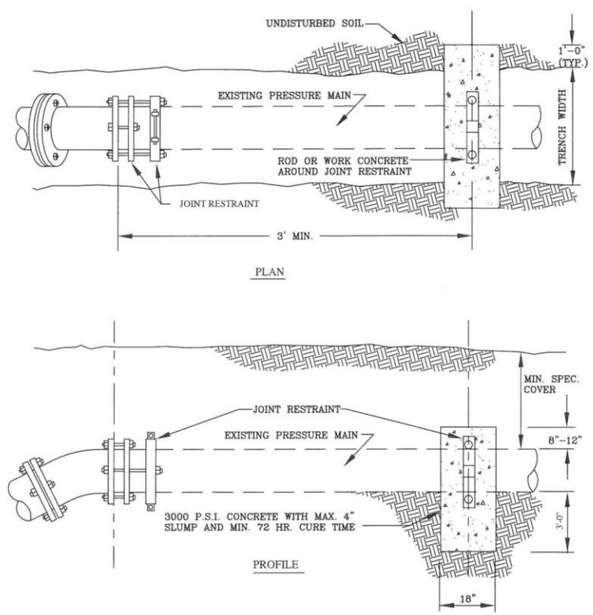

PINELLAS COUNTY DEPARTMENT OF ENVIRONMENT AND INFRASTRUCTURE (D.E.I.) REVERSE DEADMAN RESTRAINT DETAIL	DETAIL INDEX I.D.: PCU GD 6 DATE: SEPTEMBER/2012 DIV. DIRECTOR OF ENG. & TECH. SUPPORT REVISION:

REVERSE DEADMAN DETAIL (11 / C-0.9)
N.T.S.

NOTES:
1. ALL MATERIALS SHALL BE IN ACCORDANCE WITH THE LATEST P.C.U. APPROVED MATERIAL SPECIFICATION MANUAL.
2. FILTER FABRIC REQUIRED ON VALVES WHEN PIPE LINE HAS 5' OR MORE OF COVER
VALVE KEY EXTENSION REQUIRED ON VALVES WITH OPERATOR NUT OVER 3' DEEP.
COLOR CODED POLY WRAP REQUIRED ON ALL BURIED VALVES AND FITTINGS.

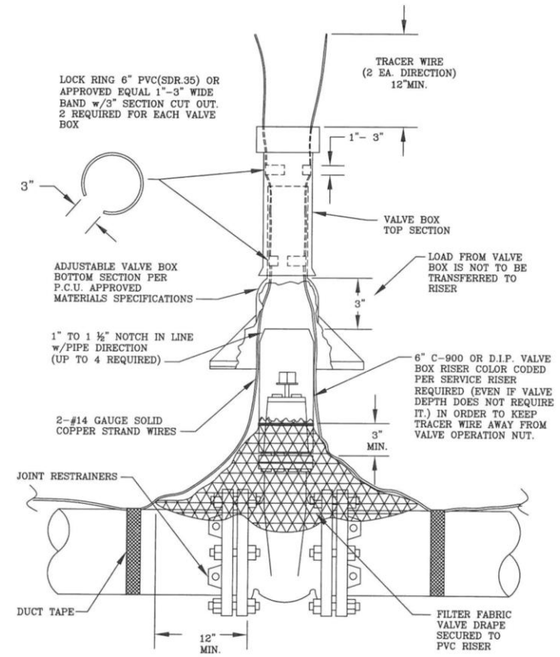

PINELLAS COUNTY DEPARTMENT OF ENVIRONMENT AND INFRASTRUCTURE (D.E.I.) VALVE BOX/TRACER WIRE INSTALLION DETAIL	DETAIL INDEX I.D.: PCU GD 4 DATE: SEPTEMBER/2012 DIV. DIRECTOR OF ENG. & TECH. SUPPORT REVISION:

VALVE BOX/TRACER WIRE INSTALLATION (12 / C-0.9)
N.T.S.

NOTES:
1. ALL MATERIALS SHALL BE IN ACCORDANCE WITH THE LATEST P.C.U. APPROVED MATERIAL SPECIFICATION MANUAL.
2. IF STREET IS A SHORT CUL-DE-SAC, LOCATOR WIRE IS TO RUN FROM MAIN VALVE TO BLOW-OFF VALVE BOX.

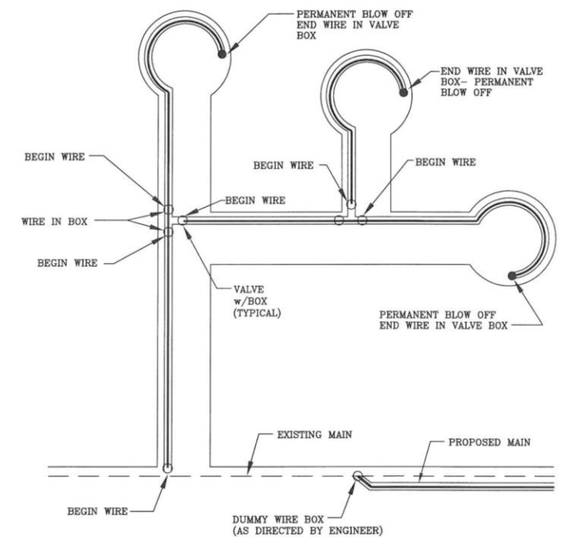

PINELLAS COUNTY DEPARTMENT OF ENVIRONMENT AND INFRASTRUCTURE (D.E.I.) TRACER WIRE LAYOUT DETAIL	DETAIL INDEX I.D.: PCU GD 3 DATE: SEPTEMBER/2012 DIV. DIRECTOR OF ENG. & TECH. SUPPORT REVISION:

TRACER WIRE LAYOUT DETAIL (13 / C-0.9)
N.T.S.

GROUNDWATER / DEWATERING NOTE:
THE PRESENCE OF GROUNDWATER SHOULD BE ANTICIPATED ON THIS PROJECT. CONTRACTOR'S BID SHALL INCLUDE CONSIDERATION FOR THIS ISSUE. WHEN PERFORMING GRADING OPERATIONS DURING PERIODS OF WET WEATHER, PROVIDE ADEQUATE DEWATERING, DRAINAGE AND GROUND WATER MANAGEMENT TO CONTROL MOISTURE OF SOILS.

811 KNOW WHAT'S BELOW ALWAYS CALL 811 BEFORE YOU DIG
It's fast. It's free. It's the law.
www.callsunshine.com

No.	REVISIONS	DATE	BY

Kimley-Horn and Associates, Inc.
© 2013 KIMLEY-HORN AND ASSOCIATES, INC.
655 NORTH FRANKLIN STREET, SUITE 150, TAMPA, FL 33602
PHONE: 813-620-1460
WWW.KIMLEY-HORN.COM CA 00000696

SCALE AS NOTED

CIVIL DETAILS

CITY OF ST. PETE BEACH
PUMP STATION NO.1 & 2
REHABILITATION
PINELLAS COUNTY FLORIDA

DATE OCTOBER 2013
PROJECT NO. 148404000
SHEET NUMBER C-0.9

Drawing name: K:\TAM_Civil\148404 - City of St. Pete Beach\000 - Pump Station No. 2\CADD\PlanSheets\C-08 DETAILS.dwg CIVIL DETAILS Oct 25, 2013 10:00am by: jordan.walker
This document, together with the concepts and designs presented herein, as an instrument of service, is intended only for the specific purpose and client for which it was prepared. Reuse of and improper reliance on this document without written authorization and adaptation by Kimley-Horn and Associates, Inc. shall be without liability to Kimley-Horn and Associates, Inc.

NOTES
1. ALL MATERIALS SHALL BE IN ACCORDANCE WITH THE LATEST P.C.U. APPROVED MATERIAL SPECIFICATION MANUAL.
2. IF VALVE IS LOCATED WITHIN A SIDEWALK CONCRETE COLLAR MAY BE ELIMINATED AND DISK SET FLUSH DIRECTLY IN SIDEWALK.
3. BRONZE DISK REQUIRED: FOR ALL VALVES, AND DUMMY BOXES.
4. THE 24"x24"X6" THICK CONCRETE VALVE BOX COLLAR CAN BE INSTALLED BELOW THE FRICTION COARSE AND THE BRONZE DISK ANCHORED IN A NEAR-BY CURB OR SIDEWALK.
5. ALL VALVES/BOXES SHALL BE LOCATED BY MEANS OF A PERPENDICULAR 6"x2' BLUE STRIPE ACROSS THE CURB. THE DISTANCE FROM THE BACK OF THE CURB TO THE VALVE SHALL BE STENCILED ON THE CURB WITH NUMBERS FOUR INCHES HIGH, PAINTED BLUE, BY THE CONTRACTOR.

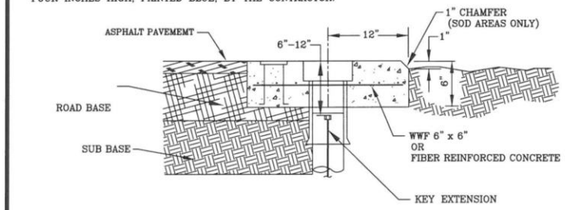

SECTION A-A

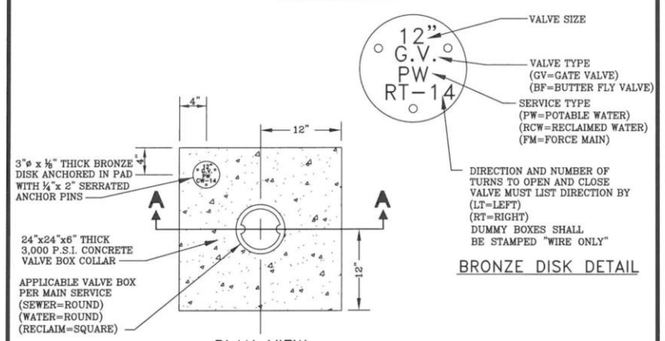

BRONZE DISK DETAIL

PLAN VIEW

PINELLAS COUNTY DEPARTMENT OF ENVIRONMENT AND INFRASTRUCTURE (D.E.I.) CONCRETE VALVE BOX AND COLLAR DETAIL	DETAIL INDEX I.D.: PCU GD 5 DATE: SEPTEMBER/2012 DIV. DIRECTOR OF ENG. & TECH. SUPPORT REVISION:

CONCRETE VALVE BOX AND COLLAR DETAIL (14 / C-1.0)
N.T.S.

NOTES:
1. ALL MATERIALS SHALL BE IN ACCORDANCE WITH THE LATEST P.C.U. APPROVED MATERIAL SPECIFICATION MANUAL.
2. CORPORATION STOPS SHALL BE COMPATIBLE WITH DR 9 (C.T.S.) H.D.P.E. TUBING.
3. SERVICE SADDLE REQUIRED FOR ALL TAPS.
4. METER ONLY, TO BE FURNISHED BY P.C.U.
5. METER BOXES SHALL BE INDUSTRIAL SIZE.
6. ALL METER BOXES LOCATED WITHIN VEHICULAR TRAVEL AREAS SHALL BE H-20 LOADING. ALL OTHERS SHALL BE H-10 LOADING.
7. TRACER WIRE REQUIRED ON ALL SERVICES.
8. SERVICES OVER 60' IN LENGTH SHALL BE UP-SIZED TO 2".
9. TAP AND METER SHALL BE INSTALLED BY P.C.U. ON ALL PRIVATELY DEVELOPED PROJECTS.

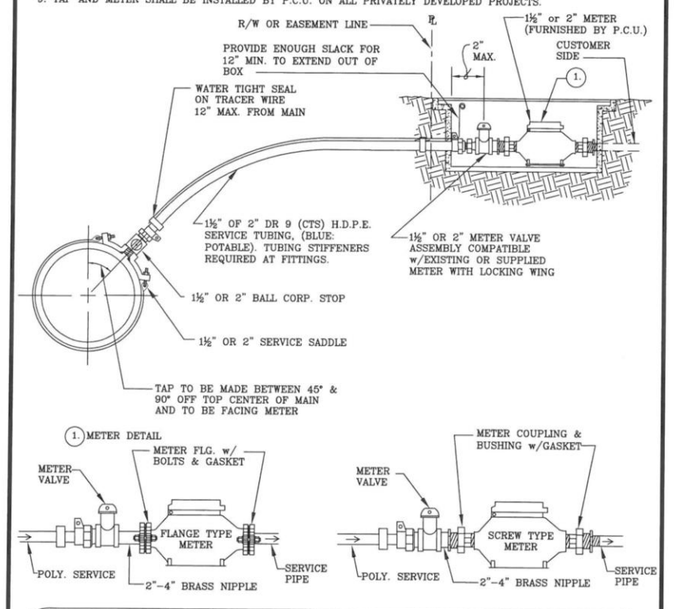

PINELLAS COUNTY DEPARTMENT OF ENVIRONMENT AND INFRASTRUCTURE (D.E.I.) 1½" OR 2" POTABLE WATER SERVICE CONNECTION DETAIL	DETAIL INDEX I.D.: PCU WD 4 DATE: SEPTEMBER/2012 DIV. DIRECTOR OF ENG. & TECH. SUPPORT REVISION:

WATER SERVICE CONNECTION (15 / C-1.0)
N.T.S.

NOTES:
1. ALL MATERIALS SHALL BE IN ACCORDANCE WITH THE LATEST P.C.U. APPROVED MATERIAL SPECIFICATION MANUAL.
2. USE 2-#14 GAUGE (MINIMUM), SOLID CORE COPPER WIRE WITH COLOR CODED INSULATION PER SERVICE.
3. THERE SHALL BE SUFFICIENT SLACK IN TRACER WIRE TO EXTEND A MIN. OF 12" ABOVE VALVE BOX.
4. WIRE IS TO CONTINUE THROUGH TEES ON MAIN LINE WHERE NO VALVES EXIST.
5. ATTACH WIRE TO TOP CENTER LINE OF MAIN USING DUCT TAPE OR APPROVED EQUAL @ 5'- 0" INTERVALS.
6. DUMMY BOXES ARE TO CONSIST OF A TOP SECTION OF A VALVE BOX ASSEMBLY ENCASED IN A CONCRETE VALVE BOX COLLAR PER P.C.U. APPROVED STANDARD DETAIL.

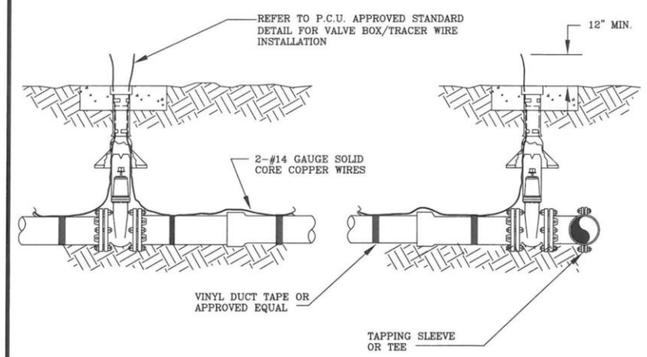

PINELLAS COUNTY DEPARTMENT OF ENVIRONMENT AND INFRASTRUCTURE (D.E.I.) TRACER WIRE INSTALLATION DETAIL	DETAIL INDEX I.D.: PCU GD 3a DATE: SEPTEMBER/2012 DIV. DIRECTOR OF ENG. & TECH. SUPPORT REVISION:

TRACER WIRE INSTALLATION (16 / C-1.0)
N.T.S.

GROUNDWATER / DEWATERING NOTE:
THE PRESENCE OF GROUNDWATER SHOULD BE ANTICIPATED ON THIS PROJECT. CONTRACTOR'S BID SHALL INCLUDE CONSIDERATION FOR THIS ISSUE. WHEN PERFORMING GRADING OPERATIONS DURING PERIODS OF WET WEATHER, PROVIDE ADEQUATE DEWATERING, DRAINAGE AND GROUND WATER MANAGEMENT TO CONTROL MOISTURE OF SOILS.

811 KNOW WHAT'S BELOW ALWAYS CALL 811 BEFORE YOU DIG
It's fast. It's free. It's the law.
www.callsunshine.com

No.	REVISIONS	DATE	BY

Kimley-Horn and Associates, Inc.
© 2013 KIMLEY-HORN AND ASSOCIATES, INC.
655 NORTH FRANKLIN STREET, SUITE 150, TAMPA, FL 33602
PHONE: 813-620-1460
WWW.KIMLEY-HORN.COM CA 00000696

SCALE AS NOTED

CIVIL DETAILS

CITY OF ST. PETE BEACH
PUMP STATION NO.1 & 2
REHABILITATION
PINELLAS COUNTY FLORIDA

DATE OCTOBER 2013

PROJECT NO. 148404000

SHEET NUMBER C-1.0

Drawing name: K:\TAM_Civil\148404 - City of St. Pete Beach\000 - Pump Station No. 2\CADD\PlanSheets\C-09 DETAILS.dwg CIVIL DETAILS Oct 25, 2013 10:00am by: jordan.walker
This document, together with the concepts and designs presented herein, as an instrument of service, is intended only for the specific purpose and client for which it was prepared. Reuse of and improper reliance on this document without written authorization and adaptation by Kimley-Horn and Associates, Inc. shall be without liability to Kimley-Horn and Associates, Inc.

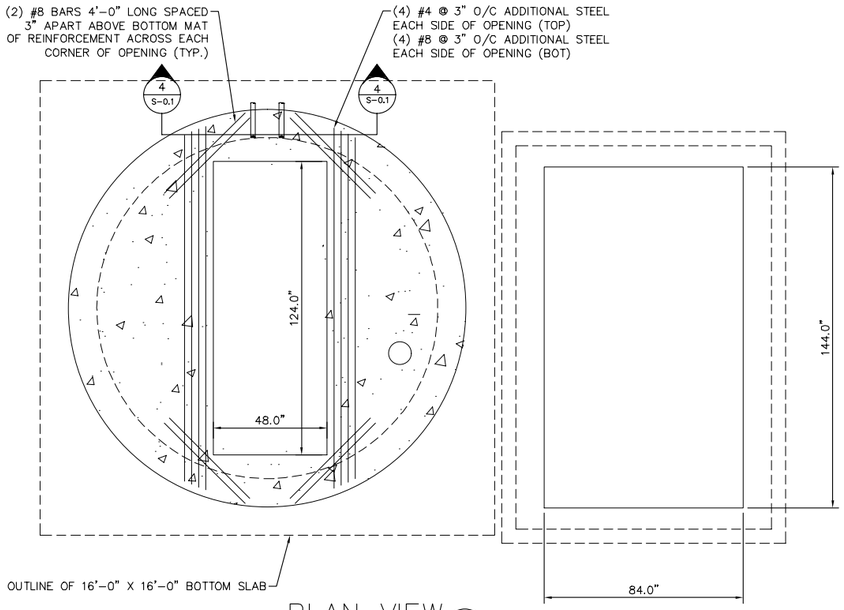

PLAN VIEW 1 S-0.1
3/16" = 1'-0"

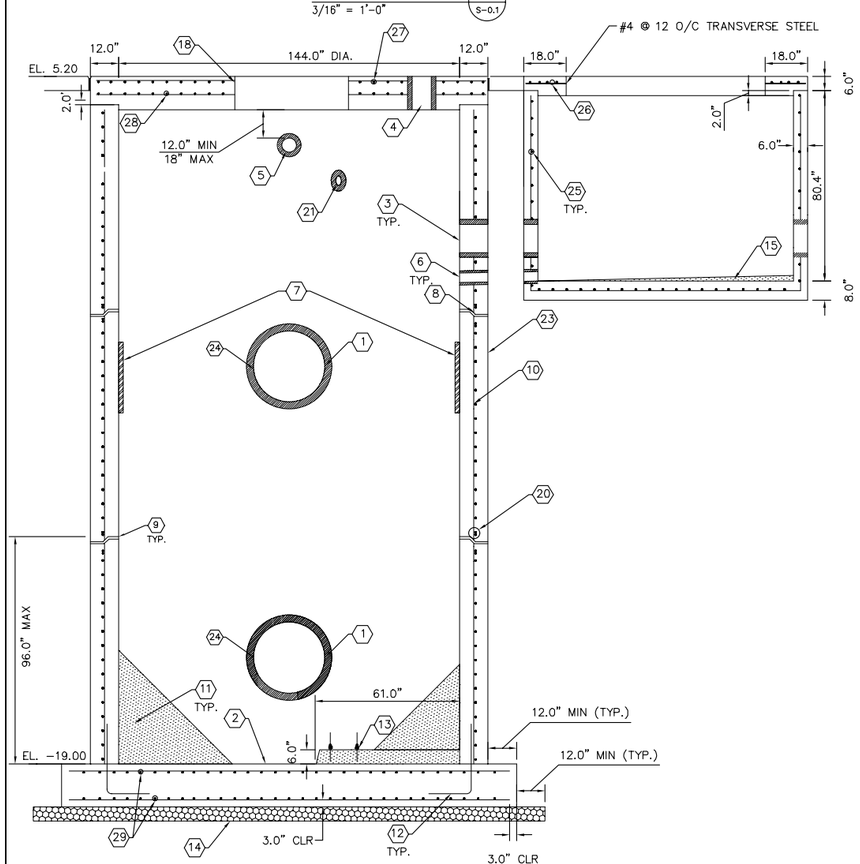

SIDE VIEW 2 S-0.1
3/16" = 1'-0"

NOTE: CJ = SAWCUT CONTROL JOINT. SEE SECTION 10 SHEET S-0.4

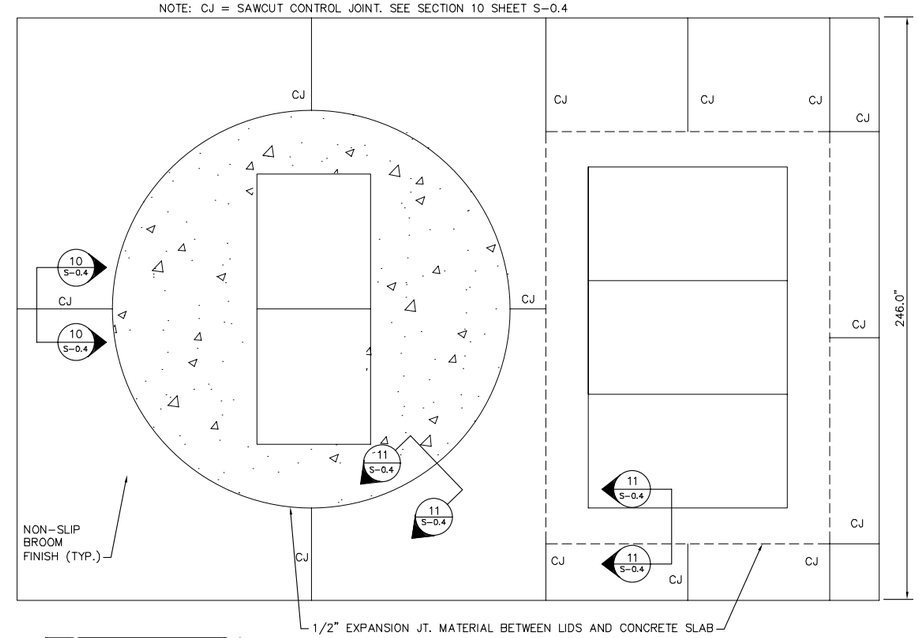

SLAB PLAN 3 S-0.1
3/16" = 1'-0"

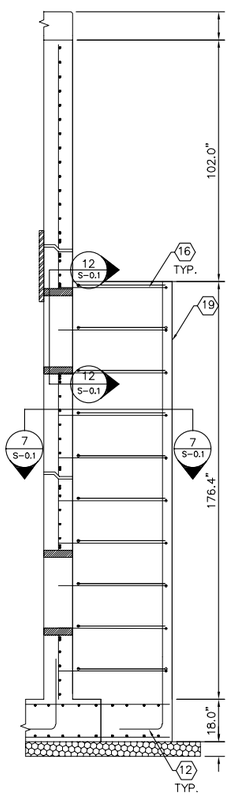

DROP CONNECTION DETAIL 7 S-0.1
3/16" = 1'-0"

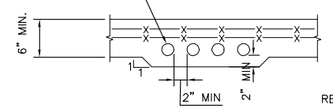

SECTION 4 4 S-0.1
N.T.S.

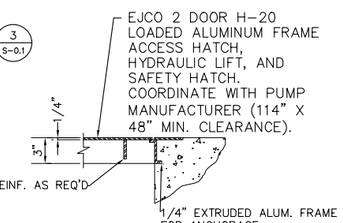

DETAIL 5 5 S-0.1
N.T.S.

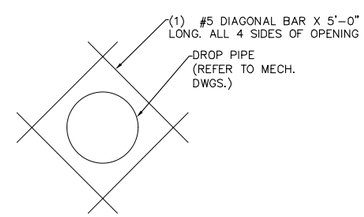

SECTION 12 12 S-0.1
N.T.S.

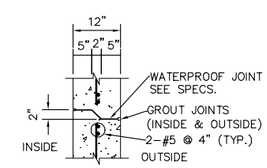

DETAIL 6 6 S-0.1
N.T.S.

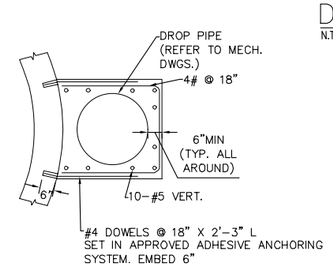

SECTION 7 7 S-0.1
3/16" = 1'-0"

GENERAL NOTES:

1. CONTRACTOR SHALL FIELD VERIFY EXISTING CONDITIONS PRIOR TO BEGINNING CONSTRUCTION AND ORDERING EQUIPMENT. CONTRACTOR SHALL NOTIFY ENGINEER OF DISCREPANCIES.
2. CONTRACTOR SHALL TAKE ALL PRECAUTIONARY MEASURES NECESSARY TO PROTECT EXISTING EQUIPMENT, UTILITIES, STRUCTURES, AND PERSONNEL FROM DAMAGE OR INJURY DURING CONSTRUCTION.
3. CONSTRUCTION SEQUENCE SHALL BE COORDINATED TO AVOID ANY PUMP STATION INTERRUPTION.
4. CONTRACTOR TO COORDINATE ALL PIPE AND CONDUIT LOCATIONS WITH MECHANICAL AND ELECTRICAL DRAWINGS PRIOR TO PLACING CONCRETE. MECHANICAL CONTRACTOR SHALL PROVIDE SHOP DRAWINGS FOR EQUIPMENT AND ANCHOR BOLT LOCATIONS.
5. STRUCTURAL DRAWINGS SHALL BE WORKED TOGETHER WITH MECHANICAL AND ELECTRICAL DRAWINGS TO PROPERLY LOCATE WALL PIPES, PIPE SLEEVES, ANCHOR BOLTS, BLOCKOUTS, ETC. DISCREPANCIES SHALL BE BROUGHT TO THE ATTENTION OF THE ENGINEER OF RECORD BEFORE PROCEEDING WITH THE WORK.
6. CONTRACTOR SHALL TAKE ALL NECESSARY PRECAUTIONS TO PREVENT FLOATATION OF STRUCTURES FULLY UNTIL CONSTRUCTED AND BACKFILL IS IN PLACE AND COMPACTED.
7. DESIGN CRITERIA AND LOADS: ACI 350-CONCRETE SANITARY ENGINEERING STRUCTURES ACI 318-BUILDING CODE REQUIREMENTS FOR REINFORCED CONCRETE ASTM C 478-STANDARD SPECIFICATIONS FOR PRECAST REINFORCED CONCRETE MANHOLE SECTIONS. DESIGN LIVE LOADS: AASHTO HS-20. REQUIRED ALLOWABLE SOIL BEARING CAPACITY= 1600 PSF. CONTRACTOR'S GEOTECHNICAL ENGINEER TO VERIFY PRIOR TO FABRICATION AND CONSTRUCTION.
8. CONCRETE SHALL HAVE A MINIMUM 28-DAY COMPRESSIVE STRENGTH PER SPECIFICATIONS.
9. REINFORCING STEEL SHALL CONFORM TO ASTM 615 GRADE 60.
10. WELDED WIRE FABRIC SHALL CONFORM TO ASTM A185.
11. CLEARANCE OF REINFORCING STEEL FROM THE FACE OF CONCRETE TO THE OUTERMOST TIE OR BAR SHALL BE 2", UNLESS OTHERWISE NOTED ON THE DRAWINGS.
12. REMOVE ALL ORGANIC TOPSOIL, SURFACE VEGETATION, DEBRIS, ETC. A MINIMUM OF 6 INCH LIMEROCK BEDDING COMPACTED TO 98 % RELATIVE DENSITY SHALL BE PLACED UNDER THE WET WELL BASE SLABS. DEWATER EXCAVATION DURING WET WELL INSTALLATION. ALL WORK TO BE DONE IN THE "DRY".

KEY NOTES:

1. OPENING FOR 30" DIP INFLUENT
2. BASE SLAB
3. OPENING FOR 12" DIP DISCHARGE
4. OPENING FOR 8" DIP VENT
5. OPENING FOR 6" DIP ODOR CONTROL
6. OPENING FOR 2" PVC DRAIN PIPE
7. INSTALL CAST-IN-PLACE TLOCK PVC LINER ON ENTIRE INTERIOR SURFACE OF WETWELL
8. FOR WALL REINFORCEMENT USE #5 @ 6" FOR HORIZONTAL AND #3 @ 6" FOR VERTICAL. CENTERED IN WALL
9. CONTROL JOINTS SPACED EVERY 8FT STARTING FROM BOT. ELEVATION
10. CENTER REINFORCEMENT (TYP.)
11. NON-SHRINK GROUT FILLET ALL AROUND, SLOPE OF 1:1 (MAX HEIGHT 2-FT), TO BE COATED WITH INTERIOR WETWELL PROTECTIVE COATING.
12. #3 DOWELS WITH STD ACI HOOK. LAP VERTICAL STEEL 18" MIN. (TYP.)
13. 316 SS ANCHOR BOLTS LOCATION & SIZE PER PUMP MANUFACTURERS REQUIREMENTS
14. LIMEROCK BASE COMPACTED TO 98% MODIFIED PROCTOR MAX DRY DENSITY - 6" MIN THICKNESS
15. NON-SHRINK GROUT SLOPED AT 2% TO PVC DRAIN
16. #4 DOWELS @ 18" SET IN EPOXY
17. NOT IN USE
18. SEE DETAIL 5 ON THIS SHEET
19. DROP CONNECTION ENCASEMENT - CAST IN PLACE W/ 30" DIP
20. SEE DETAIL 6 ON THIS SHEET
21. OPENING FOR 4" PVC DRAIN
22. NOT IN USE
23. PRECAST REINFORCED CONCRETE WALLS
24. ADD 4-#5 BARS X 5'-0" L DIAGONAL AT OPENING GREATER THAN 12" AT WALLS (TYP.)
25. #5 BARS @ 12" O.C. E.W CENTERED IN WALL OR SLAB
26. 4-#7 CONT. AROUND OPENING, EQUALLY SPACED (TYP. 4 SIDES) CENTERED IN SLAB
27. #4 @ 6" E.W TOP
28. #8 @ 6" E.W BOTTOM
29. #5 @ 6" E.W T&B RECTANGULAR PATTERN

GROUNDWATER / DEWATERING NOTE:
THE PRESENCE OF GROUNDWATER SHOULD BE ANTICIPATED ON THIS PROJECT. CONTRACTOR'S BID SHALL INCLUDE CONSIDERATION FOR THIS ISSUE. WHEN PERFORMING GRADING OPERATIONS DURING PERIODS OF WET WEATHER, PROVIDE ADEQUATE DEWATERING, DRAINAGE AND GROUND WATER MANAGEMENT TO CONTROL MOISTURE OF SOILS.

811 KNOW WHAT'S BELOW ALWAYS CALL 811 BEFORE YOU DIG
It's fast. It's free. It's the law.
www.callsunshine.com

No.	REVISIONS	DATE	BY

Kimley-Horn and Associates, Inc.
© 2013 KIMLEY-HORN AND ASSOCIATES, INC.
655 NORTH FRANKLIN STREET, SUITE 150, TAMPA, FL 33602
PHONE: 813-620-1460
WWW.KIMLEY-HORN.COM CA 00000696

DESIGN ENGINEER: SETH E. SCHMID, P.E.
FLORIDA REGISTRATION NUMBER: 54640
SCALE AS NOTED
DESIGNED BY JWW
DRAWN BY JRT
CHECKED BY WEW
DATE:

PUMP STATION 2 WETWELL PLAN AND SECTIONS

CITY OF ST. PETE BEACH
PUMP STATION NO.1 & 2 REHABILITATION
PINELLAS COUNTY FLORIDA

DATE OCTOBER 2013
PROJECT NO. 148404000
SHEET NUMBER S-0.1

Drawing name: K:\TAM_Civil\148404 - City of St. Pete Beach\000 - Pump Station No. 2\CADD\PlanSheets\S-02 WETWELL SECTION.dwg WETWELL SECTION Oct 25, 2013 10:00am by: jordan.walker
This document, together with the concepts and designs presented herein, as an instrument of service, is intended only for the specific purpose and client for which it was prepared. Reuse of and improper reliance on this document without written authorization and adaptation by Kimley-Horn and Associates, Inc. shall be without liability to Kimley-Horn and Associates, Inc.